EXHIBIT 4

EXHIBIT

R-4

CITY OF EAGLE EXHIBIT NO. 4

CITY OF EAGLE

Municipally Owned Water System

PWS #4010201

AMENDED MASTER PLAN

Revised November 2005

Master Plan Update #1

- March 2008 -

HOLLADAY ENGINEERING COMPANY

32 N. Main Street P.O. Box 235 Payette, ID 83661

(208) 642-3304 fax (208) 642-2159

e-mail: hec@holladayengineering.com

EG061204 WS

CITY OF EAGLE

Municipally Owned Water System

PWS #4010201

AMENDED MASTER PLAN

Revised November 2005

Master Plan Update #1

- March 2008 -

PROFESSIONAL ENGINEER
REGISTERED
12246
3-21-08
STATE OF IDAHO
KASEY K. KETTERLING

APPROVED

By: _____

IDAHO DEQ
Boise Regional Office

Date: April 17, 2009

Prepared by:

HOLLADAY ENGINEERING COMPANY

32 N. Main Street P.O. Box 235 Payette, ID 83661
(208) 642-3304 fax (208) 642-2159
e-mail: hec@holladayengineering.com
EG061204 WS

CITY OF EAGLE

Municipally Owned Water System

PWS #4010201

AMENDED MASTER PLAN

Revised November 2005

Master Plan Update #1

- March 2008 -

PROFESSIONAL ENGINEER
REGISTERED
12246
3-21-08
STATE OF IDAHO
KASEY K. KETTERLING

Prepared by:

HOLLADAY ENGINEERING COMPANY

32 N. Main Street P.O. Box 235 Payette, ID 83661
(208) 642-3304 fax (208) 642-2159
e-mail: hec@holladayengineering.com
EG061204 WS

Table of Contents

1 Chapter 1.0
Conclusions & Recommendations

2 Chapter 2.0
Introduction

3 Chapter 3.0
System Ownership & Management

4 Chapter 4.0
Service Area, Existing Facilities & System Water Usage

5 Chapter 5.0
Component Inventory & Capital Replacement Plan

6 Chapter 6.0
Capital Improvement & Expansion Plan

7 Chapter 7.0
Documentation of Water Right & Quality Monitoring

8 Chapter 8.0
Monitoring & Compliance Plans

9 Chapter 9.0
Source Protection Plan

10 Chapter 10.0
System Budget

AVERY® READY INDEX® INDEXING SYSTEM 600015

1

Chapter 1.0
Conclusions & Recommendations

EXECUTIVE SUMMARY UPDATE

This Update to the City of Eagle Amended Master Plan, 2005 (the "2005 Plan), presents additional information and recommendations for the ongoing development of the City's water system. Envisioned in the 2005 Plan was the development of the Western Expansion Area which includes that area between Linder Road and Highway 16 and improvements to the eastern area system. This update focuses on improvements in the Western Expansion Area in addition to the City's construction of Eagle Well No. 3 and a 1,000,000 gallon storage reservoir.

In the Conclusions and Recommendations, Section 1.0 of the 2005 Plan, fourteen separate items were identified for action. While many recommendations involve long-range implementation, the City has aggressively attacked all the items or issues recommended, and through actions identified in the Update, made significant progress in developing and improving the public drinking water system.

With the addition of the Western Expansion Area System, the City of Eagle is set to fully serve within its designated service area and demonstrate the capability to continue to develop a water system that meets or exceeds the requirements of the Idaho Department of Environmental Quality (DEQ) and the public.

CHAPTER 1.0 CONCLUSION AND RECOMMENDATIONS UPDATE

The following table illustrates the City's intent and positive actions to carry out the recommendations of the 2005 Plan. Actions identified below mirror the list of Conclusions and Recommendations of the Plan

Item	Action	Status
A	Periodically update Water Master Plan	Done
B	Correct identified deficiencies including adding an additional well, 1MG reservoir, standby power and improved well house.	Completed in 2007/8
C	Pursue funding of improvements	Done, and continuing
D	Expand distribution system to adjacent areas	Done, and continuing
E	Pursue development of Western Area System	Done, and continuing
F	Develop in-house operating plan and staff	In-process
G	Develop water supply for future	In-process
H	Pursue existing IDWR permits	In-process
I	Pursue additional storage site for Western Area	In-process
J	Adopt recommended fee for new development to fund storage and trunk line construction	City adopted a $1,500 STL fee
K	Evaluate/Adjust rates to reflect cost of operation	City reviews cost each budget year
L	Employ Late-comers Agreement as necessary to allow equitable cost sharing	Done
M	Assimilate operation of total water system	Not yet implemented
N	Retain mutual-aid intertie with UWI	In-process

2

Chapter 2.0
Introduction

CHAPTER 2.0 INTRODUCTION

Section 2.3 Western Area Startup

This Update presents the plan of startup and the plan of operation for currently active residential developments including Eaglefield Subdivision, currently active phases of Legacy Subdivision, as well as some adjacent properties including the Orchards, a 72 unit subdivision with an additional public well to be connected to the current system in 2008 situated generally in or near the part of Block 1 as designated in the Expansion Plan. (Chapter 6 of the 2005 Plan).

A system startup plan and pump control plan is included in Appendix I. Following this plan, the system has been tested and is presently on-line in stand-by mode. Standby mode provides fire protection for the area. No services have been installed pending approval of DEQ and a letter allowing the lifting of sanitary restrictions.

3

Chapter 3.0
System Ownership & Management

CHAPTER 3.0 SYSTEM OWNERSHIP AND MANAGEMENT

Section 3.1 Ownership Update

Owner Contact Information:

Owner: City of Eagle
P.O. Box 1520
Eagle, ID 83616
(208) 939-6813 phone
(208) 939-6827 fax

Contact: Facilities Manager
Michael Echeita, (208) 489-8776

Section 3.2 Management Update

The Western Expansion Area presented in Section 4.1.2 of the 2005 Plan is being operated under a Task Order issued to the City Engineer pursuant to their agreement with Clearwater Operations, Inc. A map showing the areas of contract operation is included for clarity at the end of this section. This is presented in detail in Section 3.5 below and is consistent with the remainder of the Sections in the 2005 Plan.

Lexington/Brookwood (Eastern) Operating Area:
Operator: United Water Operations
Contact: Bob Lawrence
Mailing Address:
8248 W. Victory Rd.
Boise, ID 83709
Telephone: (208) 362-7870
FAX: (208) 362-7069

Legacy/Eaglefield (Western) Operating Area:
Operator: Clearwater Operations, Inc.
Contact: Ron Gearhart, (208) 573-7606 cell
Mailing Address:
616 S. Washington Ave.
Emmett, ID 83617
Telephone: (208) 365-5385
FAX: (208) 365 5389

City Engineer: Holladay Engineering Co.
Contact: Kasey Ketterling, (208) 642-3304

Section 3.4 Western Area Ownership and Management Update

The City of Eagle has annexed, zoned and approved 196 lots for development in the combined area of Eaglefield Subdivision and Legacy Subdivision lying west of Linder Road as presented in Section 4.1.2 of the 2005 Plan. Additionally, the City has annexed and entered into Development Agreements for adjacent properties abutting Legacy and Eaglefield, all of which were anticipated in the City's Comprehensive Plan and the 2005 Plan approved by DEQ.

Subsequent to plan approval, owners/developers have constructed infrastructure including roads, sewer, water, and drainage systems in accordance with plans approved by ACHD, DEQ and the City of Eagle. The construction has met the requirements of the approving agencies and the plat dedicating the improvements to the City of Eagle has been signed by the owners and the City with sanitary restrictions in place until the DEQ approves the addition to the public drinking water system (PWS #4010201) and lifts sanitary restrictions. Wells and water lines dedicated to the City are shown in Appendix B. Copies of select well design documents are included for reference in Appendix F, while the full design file has been retained by the City Engineer and the City. The City, along with the Eagle Fire District has reviewed, tested and approved the water system for quality and quantity required for issuance of building permits. See Appendix C.

Section 3.5 Contract Operation Update

The City of Eagle, through its City Engineer, Holladay Engineering Co., contracts with Clearwater Operations, Inc. for water system operations for the Western Expansion Area. This agreement, Task Order No. 1 and attachments including Holladay subcontract agreement with Clearwater, authorizes Holladay to provide for the administration, labor and material necessary to operate the City Western Expansion Area water system including development of standard operation procedures (SOP) for each component and an Operations and Maintenance Manual for the system. See Appendix B. It is anticipated by both the City and Holladay that at some point when the system is fully functional including meter reading procedure and quality assurance of the City's new utility billing system, the City of Eagle will consider issuance of a Request for Qualifications for a city-wide operations service provider.

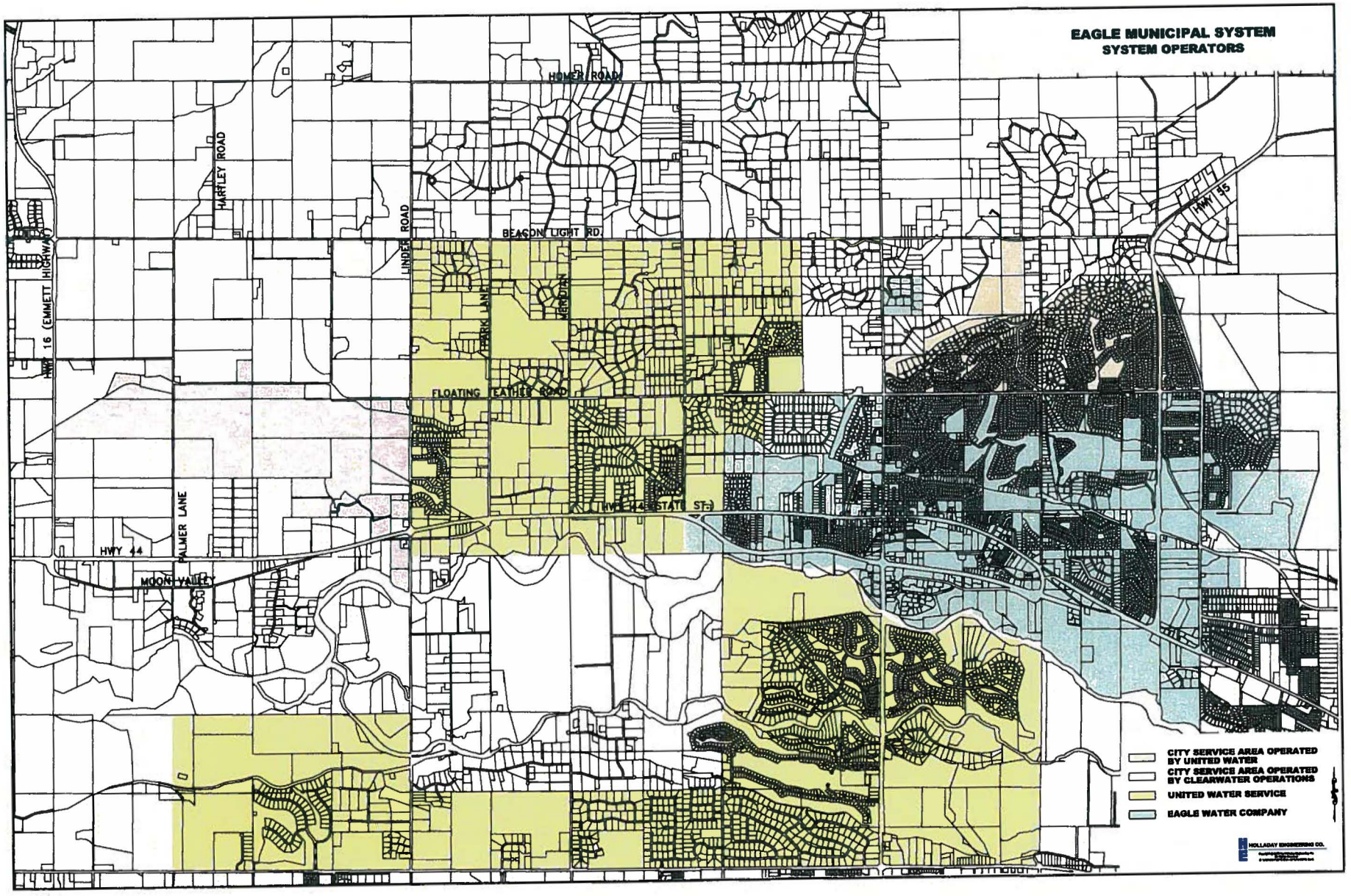
EAGLE MUNICIPAL SYSTEM
SYSTEM OPERATORS
HOMER ROAD
HARTLEY ROAD
LINDER ROAD
BEACON LIGHT RD.
HWY 16 (EMMETT HIGHWAY)
CLERK LANE
MERIDIAN
FLOATING FEATHER ROAD
HWY 44 (STATE ST.)
HWY 44
PALMER LANE
MOON VALLEY
HWY 55
CITY SERVICE AREA OPERATED BY UNITED WATER
CITY SERVICE AREA OPERATED BY CLEARWATER OPERATIONS
UNITED WATER SERVICE
EAGLE WATER COMPANY
HOLLADAY ENGINEERING CO.

4

Chapter 4.0
Service Area, Existing Facilities & System Water Usage

CHAPTER 4.0 SERVICE AREA, EXISTING FACILITIES AND SYSTEM WATER USAGE

Section 4.4 2007-8 Facility Additions Update

The system presently includes two new (2007) wells, Eagle Well No. 4 (aka Legacy Well) and Eagle Well No. 5 (aka Eaglefield Well). An additional well and accompanying infrastructure are to be constructed in June, 2008 in the Orchards development at the southwest corner of Linder Road and State Street (Hwy. 44). Plans will be submitted to DEQ for approval by the developer's engineer. This will be identified as Eagle Well No. 6 (Orchards Well). Existing well as-built plans are included in Appendix E of this Plan Update.

The City of Eagle western system, including Eagle Wells 4 and 5 has been developed utilizing both artesian flow and pumped aquifer flow. Testing was performed on the system after construction was completed to verify the production capacity of the installed system and mechanical performance for both artesian and aquifer pumping systems. The results of this testing are included in Appendix C and are as follows;

Eagle Well #4 (Legacy Well):

Artesian Flow:	570 gpm
Maximum pumping capacity:	1886 gpm

Eagle Well #5 (Eaglefield Well):

Artesian Flow:	700 gpm
Maximum pumping capacity:	2460 gpm

Even though the values above have been demonstrated for each well, DEQ has requested that further testing be performed to verify this result in compliance with IDAPA 58.01.08.510.06. In the interim, DEQ has agreed to accept conservative flow values of 1000 gpm for Well #4 and 1580 gpm for Well #5 (which is the rate the system was pumped during the 7 day test). Upon retesting the well flow capacity, updated declining balance worksheets will be provided to DEQ.

Both systems have been designed to pump from the artesian flow until the demand of the system exceeds the available artesian flow. The schematic below demonstrates pump configuration.

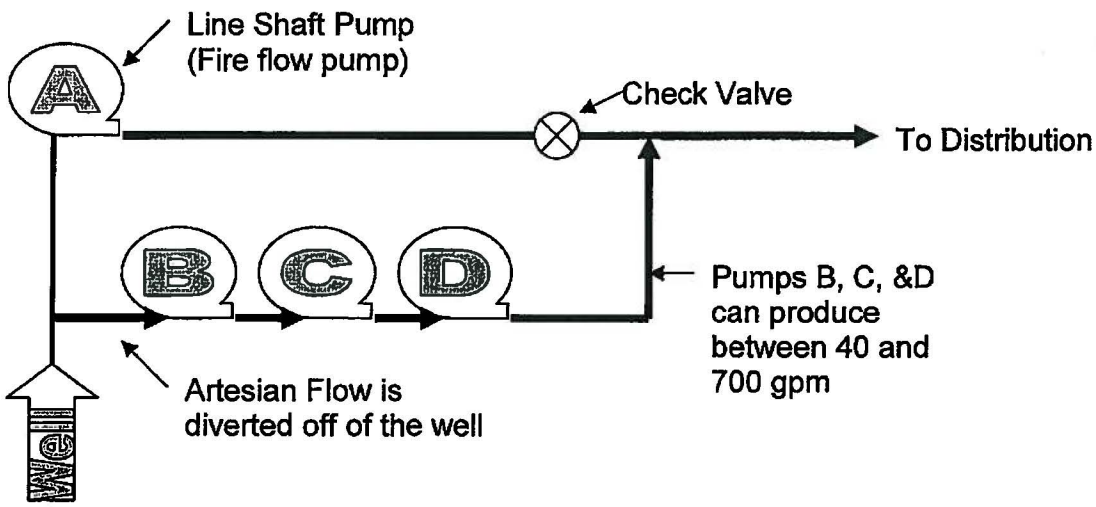

Wells 4 and 5 have been installed with the same configuration. During a fire flow event, pumps B, C, and D will be turned off and pump A will be initiated in both well houses. In the event that Pump A is out of service for one of the well houses, pumps B, C, and D will continue to pump artesian flow to the system.

Example #1:
If the fire flow pump (A) for Eagle Well #4 (Legacy) is out of service, the available flow to the system will be as follows;

EW#4 Artesian	570 gpm
EW#5 Fire Flow	1,580 gpm
Available Flow	2,150 gpm

Example #2:
If the fire flow pump (A) for Eagle Well #5 (Eaglefield) is out of service, the available flow to the system will be as follows;

EW#4 Fire Flow	1,000 gpm
EW#5 Artesian	700 gpm
Available Flow	1,700 gpm

In both examples above, the available flow in the event that a large pumps is out of service exceeds the required fire flow. Because of the available artesian flow, the system meets the mechanical redundancy requirements established in IRPDWS. Both well houses have been designed with back-up power generators capable of supplying enough power to run the pumps houses for at least 8 hours during a power outage. Modeling of the east system confirms that minimum required fire flow is available at all hydrants under maximum day demand conditions, confirming that the system satisfies IRPDWS mechanical redundancy

requirements for that situation. Modeling results for both east and west systems are provided in Appendix H.

Declining balance worksheets (Appendix G) were prepared based on project and historic water demand rates. The "Project Use" peak hour and maximum day demand rates of 0.50 gpm/ERC and 0.33 gpm/ERC respectively is taken from Section 6.2.1 of the 2005 Amended Master Plan. The very conservative "Historic Use" peak hour and maximum day demand rates of 0.74 gpm/ERC and 0.50 gpm/ERC respectively is taken from Section 4.3 of the 2005 Amended Master Plan. The distinguishing characteristic of the two declining balance worksheets is that Project Use reflects a range of municipal water use normal to a diverse mixture of residential, commercial and industrial customers, whereas the basis for the Historical Use worksheet represents residential use only in the City's current eastern water system area. The Projected Use worksheet shows demand exceeding IRPDWS mechanical redundancy capacity at 600 ERCs, whereas the Historic Use worksheet shows demand exceeding IRPDWS mechanical redundancy capacity at 400 ERCs. The system will initially serve the first two phases of Legacy and the first two phases of Eaglefield for a total of 470 potential ERCs. When a flow test with the installed pumps is completed to demonstrate the actual design capacity of the Eagle Well #4 (Legacy), the declining balance worksheets may be revised. Until then, the initial service limit is set at 400 ERCs by the 1,000 gpm flow value of the well. The limit will only be increased when additional well capacity is added and/or DEQ has reviewed and approved an engineering report that demonstrates that actual demand is less than presented by the Historic Use worksheet.

The service area of Eagle's Municipal Water System is not changed by the recent additions of pipes and wells. These added facilities are consistent with the Western Expansion Area as defined in the 2005 Plan. The City's current western area distribution system consists of 6,223 feet of 16-inch, 2,338 feet of 12-inch, 9,576 feet of 8-inch, and 379 feet of 6-inch water mains looped to meet system flow requirements. The system has 24 fire hydrants and 71 valves to control fire hydrants and system isolation for flushing or maintenance. 302 meter setters have been placed at building lots per City and ISPWC standards. All system components were installed in 2007 and are located in a GIS program to track inventory and location of features. A map entitled "City of Eagle Water System – Western Area – 2007" from the water model has been included in Appendix B. An additional development, the Orchards, has received annexation and preliminary approval for construction in 2009.

In a fire flow test conducted on January 23, 2008 and witnessed by the Eagle Fire Department and the Idaho Surveying and Rating Bureau, the City achieved a hydrant flow of 2,026 gallons-per-minute (gpm) at 63 pounds per square inch (psi) residential with an automatic ramp up from 0-gpm demonstrating that the system meets all the conditions for redundancy and system automation required

by the Fire District and DEQ. See Appendix C. A calculated pump yield of 3,765 gpm was available for system flow at 20 psi residential. The design fire flow for the western area is 1,500 gpm. The Eagle Fire District Fire Marshall will provide a letter acknowledging this design flow value. A system control plan has been designed by Holladay Engineering Co. and implemented by Clearwater Operations Inc. through individual well house programming. A full system SCADA control system will be installed by June, 2008.

System water use is not anticipated to vary from the present system evaluated in the 2005 Plan. The western area has a pressurized irrigation system in place using surface water independent from the domestic water system. Water amenities utilize the irrigation system for makeup and operation. The water use values have been incorporated into a declining balance table in Appendix G.

The Eastern system has constructed Eagle Well #3 (Brookwood Well) and the 1,000,000 gallon reservoir. Both components were in compliance with the 2005 Amended Master Plan. Any issues with capacity have been resolved with the addition of the reservoir. Included in Appendix H are modeling results from the eastern system demonstrating that there is adequate supply under both full and empty reservoir conditions.

5

Chapter 5.0
Component Inventory & Capital Replacement Plan

CHAPTER 5.0 COMPONENT INVENTORY AND CAPITAL REPLACEMENT PLAN

Section 5.1 Component Inventory Update

In addition to the inventory listed in the 2005 Plan, the City's current western area distribution system consists of 6,223 feet of 16-inch, 2,338 feet of 12-inch, 9,576 feet of 8-inch, and 379 feet of 6-inch water mains looped to meet system flow requirements. The system has 24 fire hydrants and 71 valves to control fire hydrants and system isolation for flushing or maintenance. 302 meter setters have been placed at building lots per City and ISPWC standards. In the eastern area, a 1,000,000 gallon reservoir and Eagle Well No. 3 have been constructed in addition to 2,752 feet of 12-inch, 1,246 feet of 8-inch, 140 feet of 6-inch water mains, 9 hydrants and 18 valves. All system components were installed in 2007 and are located in a GIS program to track new inventory and location of features.

Section 5.2 Capital Replacement Schedule, 2007 to 2027 Update

Capital item replacement will remain consistent with Section 5.2, Capital Replacement Plan of the approved 2005 Plan. Currently, there are four water meters installed with another 13 scheduled in the months of February and March, 2008. Meter replacement will also remain consistent with the approved Plan. The City is currently operating the system under the one-year guarantee provision of acceptance which will remain in place until February, 2009. As a new system, key component capital replacement is not anticipated, however, each of the electrical component inspection, diagnostic and testing actions listed in the 2005 Plan are anticipated and will be budgeted in the ensuing 2009 water system budget. A summary of installed components is included in Appendix B.

6

Chapter 6.0
Capital Improvement & Expansion Plan

CHAPTER 6.0 CAPITAL IMPROVEMENT AND EXPANSION PLAN UPDATE

Since the 2005 Plan was approved, the City has completed the City Well No. 3 (aka Brookwood Well), and a 1,000,000 gallon water reservoir. The reservoir has passed all required tests and was approved for final backfill on February 4, 2008. A new protective structure at Eagle Well No. 1 (aka Lexington Well) was completed and the electrical system changeover adding standby power and updated electrical panels will be completed in spring, 2008 after the SCADA system is installed, to allow Eagle Well No. 3 to become the primary well during this construction period. It is not anticipated that another well in the Lexington/Brookwood eastern area will be required at this time

In addition to this infrastructure development and the infrastructure described in the western area, the City prepared a detailed 2008 Budget and Capital Plan for carrying out the objectives of the approved 2005 Plan (See Chapter 10). In preparation for this effort, the City has added a billing clerk and Public Works Assistant to staff. This person is currently developing and training for implementation of the utility billing which has historically been contracted out.

Section 6.2.2 Envisioned Development Blocks Update

Development has been consistent with the general 2005 Plan. Capital improvements built in 2007 in the Western Expansion Area are parts of planned improvements for Block 1 of the 2005 Plan. The Orchards development, planned for 2009 abuts Block 1 but was originally identified in Block 2. The contraction of the housing market nationally and locally may prolong the period of development build out. Additionally, market shifts locally may, as descried in Section 6.2.2, alter actual block boundaries though the overall progression of development is preserved.

Section 6.3 Western Startup Procedure

The startup procedure for Eagle wells 4 and 5 will implement Step 1 of the Operation Plan presented in Section 6.2.1, Preliminary Design for Expansion Area. The procedure (See Appendix I) has been carried out by Clearwater Operations as follows:

- Mains and laterals have been charged, pressure tested using water from the wells and disinfected in accordance with standard procedures. Lines were flushed to purge any residual chlorine solution remaining from pipeline disinfection and to demonstrate functioning of the automatic control system in an on-line condition. Basic control system logic was programmed to coordinate operation of both wells.

- At the end of flushing, the system was adjusted and left energized under the automatic control based on maintaining sustained service pressure and following the programmed schedule of alternation of lead pump.
- Through the interaction of the programmed start sequencing under the modulating control effected by the use of variable-frequency drives, with power supply assured by standby generators, the system will maintain its pressure at the system set points at the wellheads through a range of demand from 0 gpm to 2,700 gpm residential, and will supply a maximum of 3,765 gpm while maintaining mainline pressures of 20 psi, and 3,600 gpm at 25 psi residential. See Appendix I.

Approval of the Eagle Well No. 4 at a production rate of 1,500 gpm was initially withheld by DEQ (April 19, 2007) until an additional pump test was performed. Following a meeting with DEQ, it was established that the City's request for a variance to the pump test standard would be reviewed and Eagle Well No. 4 would be rated at a conservative sustained production capacity of 1,000 gpm based on existing pump test data and the result of the 7-day aquifer test. The City shall conduct further production testing to establish greater production capacity of the well. At this time, given the adequacy of the system as configured (Appendix I) as evidenced in the fire flow tests and declining balance worksheets, the system can meet the requirements for system design and redundancy without additional flow testing.

7

Chapter 7.0
Documentation of Water Right & Quality Monitoring

CHAPTER 7.0 WATER RIGHT AND QUALITY MONITORING UPDATE

Section 7.1 Water Right Update

A Final Order for water rights for 63-32089 and 63-32090 has been issued by the Idaho Department of Water Resources (IDWR) for 2.23 cfs of municipal (domestic) flow and 6.68 cfs fire flow. Appendix G. The City has adequate water for system startup and development. In addition, the City has obtained a lease of 2.0 cfs through water right number 63-32960. Appendix G. A table identifying the water rights and worksheets for both projected and historic water declining balance have also been included in the Appendix.

The water rights listed above are for the identified points of diversion as enumerated in the filing documents. The place of use is within the service area of the City of Eagle municipal supply system except that the lease rights of 63-12448 and 63-32690 shall not be used to increase the combined diversion rate above 2.23 cfs from the western area points of diversion.

All irrigation in the service area is from a surface water pressurized system utilizing existing surface water rights.

Water quality for Eagle Well No. 5 (Eaglefield) and Eagle Well No. 4 (Legacy) was submitted to DEQ under separate cover. Total coliform testing was performed during the startup test. Results are presented in Appendix H. It should be noted that Eagle Well No. 4 (Legacy) is referred to by the subdivision name, Mosca Seca on the appended test results.

8

Chapter 8.0
Monitoring & Compliance Plans

CHAPTER 8.0 MONITORING AND COMPLIANCE PLAN

8.1 Monitoring Plan Update

An additional monitoring schedule has been added in Appendix H, "Sample Schedule Eaglefield and Legacy Wells". This will be used to guide sampling and testing of these and new Eagle Well No. 3 (Brookwood) until base line monitoring data has been collected for a two year period. Once it can be demonstrated that a consistent pattern of compliance is obtained, the City will apply to have a monitoring schedule revision.

9

Chapter 9.0
Source Protection Plan

CHAPTER 9
(Unchanged)

See AMENDED MASTER PLAN
Revised November 2005

10

Chapter 10.0
System Budget

CHAPTER 10.0 SYSTEM BUDGET

10.2 Five-year Budget Update

A number of budget projections have been prepared and reviewed by the City using a range of variables considered by the City including consolidation of operations and the addition of more customers through system consolidation with other utility providers. A worksheet for the present budget year and the resulting 2008 budget are representative of the existing conditions of the utility system.

At the present time, the City is working on a year-to-year budget projection until its long-range plans and obligations become reality, at which time the full twenty year projection of personnel, operating cost, capital plan and rates used to evaluate its financial position may be presented in detail.

The City has implemented a $1,500 per residential hookup Storage and Trunk Line fee to provide the capital recommended in Chapter 6 of the 2005 Plan. The City budgeted for added staff and capital improvements as is evident in the 2008 budget. In addition, the City has planned for significant income for capital improvements through developer contributed infrastructure. As an enterprise fund, all revenue and expenses associated with the water system remain specifically earmarked for use within the water budget in accordance with municipal accounting practices in Idaho.

II. DETAIL OF REVENUE BY FUND, OBJECT AND SUBOBJECT CON'T:

CAPITAL PROJECTS PARK FUND:

1. ESTIMATED CARRY OVER:		$0
2. OTHER REVENUE:		
DEVELOPMENT IMPACT FEES	$308,112	
STATE TREASURER INTEREST	14,000	
TOTAL OTHER REVENUE:		**$322,112**
TOTAL CAPITAL PROJECTS PARK FUND:		**$322,112**

LIBRARY-GENERAL OBLIGATION BOND FUND:

1. ESTIMATED CARRY OVER:		$38,690
2. OTHER REVENUE:		
PROPERTY TAXES	$205,455	
PENALTY & INTEREST PROPERTY TAXES	700	
STATE TREASURER INTEREST	2,000	
TOTAL OTHER REVENUE:		**$208,155**
TOTAL LIBRARY-GENERAL OBLIGATION BOND FUND:		**$246,845**

WATER ENTERPRISE FUND:

1. ESTIMATED CARRY OVER:		$193,221
2. OTHER REVENUE:		
CUSTOMER REVENUE	$1,230,000	
DEQ LOAN FUNDS	1,590,000	
HOOK-UP FEES CITY	170,000	
STL FEES (SUPPLY TRUNK LINE FEES)	564,000	
MISC REVENUE	30,000	
WATER CONSTRUCTION EQUIVALENCY (WCE) FEES	90,000	
LATE COMER'S FEES	40,000	
CONTRIBUTED CAPITAL IMPROVEMENTS	2,300,000	
STATE TREASURER INTEREST	9,000	
TOTAL OTHER REVENUE:		**$6,023,000**
TOTAL WATER ENTERPRISE FUND:		**$6,216,221**

LOCAL IMPROVEMENT DISTRICT (LID) - WATER FUND:

1. REVENUE:		
LOCAL IMPROVEMENT DISTRICT BOND REVENUE	$7,200,000	
TOTAL LID:		**$7,200,000**

TOTAL REVENUE ALL FUNDS

GENERAL CITY FUND	**$7,844,177**	
DIVERSIFIED BOND FUND	**$513,500**	
IDAHO POWER - DISTRIBUTION LINE FUND	**$337,662**	
CULTURAL ARTS COMMISSION FUND	**131,464**	
HISTORICAL COMMISSION FUND	**80,787**	
LIBRARY DEPARTMENT FUND	**1,200,341**	
CAPITAL PROJECTS PARK FUND	**322,112**	
LIBRARY GENERAL OBLIGATION FUND	**246,845**	
WATER ENTERPRISE FUND	**6,216,221**	
LID FUND	**7,200,000**	
TOTAL REVENUE ALL FUNDS:		**$24,093,109**

III. DETAIL OF EXPENDITURES BY FUND, OBJECT AND SUBOBJECT CON'T:

TOTAL LIBRARY DEPARTMENT OPERATING FUND:		**$1,040,341**
TOTAL LIBRARY RESERVE FUND:		**$160,000**
TOTAL LIBRARY FUND		**$1,200,341**

CAPITAL PROJECTS PARK FUND:

1. CAPITAL OUTLAY:

EAGLE SPORTS COMPLEX DEVELOPMENT	$322,112	
TOTAL CAPITAL PROJECTS PARK FUND:		**$322,112**

GENERAL OBLIGATION BOND FUND - LIBRARY:

1. EXPENDITURES:

PRINCIPAL BOND PAYMENT	$145,000	
INTEREST PAYMENT ON BOND	82,082	
PAYMENT RESERVE FUND	18,923	
US BANK PAYING AGENT FEES	840	
TOTAL LIBRARY-GENERAL OBLIGATION BOND FUND:		**$246,845**

WATER FUND:

1. PERSONNEL:

SALARIES - FULL TIME	$263,000	
EMPLOYMENT TESTING	500	
ANNUAL PHYSICALS	11,000	
FICA	20,120	
PERSI	27,326	
INSURANCE	81,250	
WORK COMP	3,025	
		$406,221

2. OPERATIONS & MAINTENANCE:

OFFICE SUPPLIES	5,500	
CASELLE UTILITY SOFTWARE & SUPPORT	17,000	
UTILITIES	1,500	
UTILITIES - SECURITY SYSTEMS	300	
UNITED WATER - FIRE FLOW	3,500	
TELECOMMUNICATIONS	6,000	
PUBLIC DRINKING WATER FEE	5,000	
ENTERPRISE FUND FEE	60,000	
UTILITY BILLING SOFTWARE	24,000	
UNIFORMS/LAUNDRY	800	
ADVERTISING & PUBLICATIONS	2,000	
PERMITS & FEES	8,000	
LIABILITY INSURANCE	9,600	
TRAVEL & MEETINGS	2,000	
DUES & SUBSCRIPTIONS	2,500	
TRAINING & CERTIFICATION	3,500	
POWER	46,000	
COMPUTER SOFTWARE & COPIER MAINTENANCE	4,000	
CHEMICALS AND EQUIPMENT	15,000	
MISCELLANEOUS	1,000	
POSTAGE	3,000	
EQUIPMENT REPAIR & MAINTENANCE	6,000	
TOTAL OPERATIONS & MAINTENANCE		**$226,200**

III. DETAILS OF EXPENDITURES BY FUND, OBJECT AND SUBOBJECT CON'T:

3. CONTRACTS & AGREEMENTS:

OPERATING FEES PAID TO UNITED WATER	$150,000	
STATE REVOLVING LOAN PAYMENT	134,400	
ENGINEERING SERVICES	30,000	
LEGAL SERVICES	60,000	
BILLING SERVICES	9,400	
CONTRACT SERVICES - REPAIR	12,000	
CONTRACT SERVICES - INSPECTIONS	30,000	
AUDITOR SERVICES	2,500	
ADMINISTRATIVE SERVICES (OVHD OF CH ADMIN)	60,000	
TOTAL CONTRACTS & AGREEMENTS:		**$488,300**

4. VEHICLE OPERATIONS - LEASES:

FUEL & LUBRICANTS	$10,000	
EQUIPMENT RENTAL - LEASE VEHICLES	10,000	
VEHICLE REPAIR & MAINTENANCE	10,000	
TOTAL VEHICLE OPERATIONS - LEASES:		**$30,000**

5. RESTRICTED FUNDS EXPENDITURE:

METER SETS	$170,000	
STL FEES	564,000	
DEQ LOAN FUNDS	1,590,000	
TOTAL CAPITAL OUTLAY:		**$2,324,000**

6. CAPITAL OUTLAY:

EQUIPMENT - COMPUTERS	$10,000	
RESERVE FOR WATER SYSTME R&M	120,000	
RESERVE FOR EQUIPMENT & BUILDING REPLACEMENT	20,000	
CAPITAL CONSTRUCTION PROJECTS	86,500	
TRUNK LINE CONSTRUCTION	2,200,000	
EXTEND WATER LINES	100,000	
LATE COMER'S REIMBURSEMENT	40,000	
WCE REIMBURSEMENT	85,000	
UPDATE WATER MASTER PLAN	80,000	
TOTAL CAPITAL OUTLAY:		**$2,741,500**
TOTAL WATER FUND:		**$6,216,221**

LOCAL IMPROVEMENT DISTRICT (LID) - WATER FUND:

1. EXPENDITURES:

SECURITY BOND COMPANY OR AGENCY	$550,000	
ADMINISTRATAIVE COSTS	30,000	
ENGINEERING FEES FOR LID DEVELOPMENT/ANALYSIS	215,000	
EAGLE WATER COMPANY PURCHASE	6,300,000	
L LEGAL FEES	30,000	
SCADA SYSTEM	75,000	
TOTAL LID:		**$7,200,000**

City of Eagle	**2007 through 2008 Budget Projection**					
21-Jul-07						
REVENUE						Page 1
						Notes Column
	2007			2008		
	Budgeted	Actual	Unrealized	Projected		
Customer Revenue (Based on 4800 customers)				$ 1,230,000.00	S	May be scaled, 8-10 month to operational takeover
Trans from Gen Fund Revenue Sharing				$0.00		
Misc. Revenue, Reimbursement				$ 30,000.00		Developer driven line item - placeholder
Hook up Fees				$ 170,000.00		200 Customers @ $850
Water Construction Equivalency				$ 85,000.00		200 Customers @ $450
Late Comer's Fee (Contract)				$ 40,000.00		Developer driven line item - placeholder
Contributed Capital Improvements (See Sheet 3)				$ 2,300,000.00		Developer driven line item - placeholder
State Treasurer Interest				$ 9,000.00		
Local Improvement District (Bond - See Sheet 7)				$0.00		Not included in budget as LID is assessment on property
Storage and Trunk Line Fee (STL - See Sheet 5)				$ 300,000.00		200 Customers @ $1,500
Water Fund DEQ Loan (DEQ - See Sheet 4)				$ 1,590,000.00		
TOTAL WATER FUND REVENUE				$ 5,754,000.00		Anticipated Expenditures not Developer related:
						$ [redacted]

	FIXED OPERATING COSTS						Page 2
	Personnel:	2007			2008		
	Major Objects and Sub objects	Budgeted	Actual	Unrealized	Projected		
	Salaries				$263,000.00	S	Based on five new hires, Director, 1.5 administrative
	Employment Testing				$800.00	S	based on other cities
	Annual Physical				$1,100.00	S	based on other cities
	FICA				$20,000.00	S	% of Salaries
	PERSI				$30,000.00	S	% of Salaries
	Insurance				$42,000.00	S	% of Salaries
	Workman's Comp				$2,000.00	S	% of Salaries
					$358,900.00		
	Operation and Maintenance:	2007			2008		
	Major Objects and Sub objects	Budgeted	Actual	Unrealized	Projected	S	An "S" indicates scalability for partial year income/expense
	Operating Fees - United Water	$307,500.00			$150,000.00	S	
	Operating Fees - Other operators?	$0.00			$140,000.00	S	
	State Revolving Loan Payment				$134,400.00		Bond repayment begin in January, 2008: $179,000
	Office Supplies				$5,400.00	S	Based on Residential Customers
	Billing Services				$9,400.00	S	Based on Residential Customers
	Caselle Software and Support				$26,500.00		Based on Residential Customers
	Gasoline, Lubrication				$7,200.00	S	Based on Residential Customers
	Uniforms/Laundry				$800.00	S	Based on Residential Customers
	Advertising and Publications				$2,000.00	S	Based on Residential Customers
	Permits and Fees				$8,000.00	S	Based on Residential Customers
	Liability Insurance				$9,600.00		Based on Residential Customers
	Travel and Meetings				$2,000.00	S	Based on Residential Customers
	Dues and Subscriptions				$2,500.00	S	Based on Residential Customers
	Training and Certification				$3,500.00	S	Based on Residential Customers
	Telecommunications				$6,000.00	S	Based on Residential Customers
	Power				$46,000.00	S	Based on Residential Customers
	Equipment Rental/Lease Vehicles				$10,000.00	S	Estimated
	Computer Software and Copier Maintenance				$4,000.00	S	Based on Residential Customers
	Equipment Repair and Maintenance				$6,000.00	S	Based on Residential Customers
	Chemicals and Equipment				$15,000.00	S	Based on Residential Customers
	Miscellaneous				$1,000.00	S	Based on Residential Customers
	Postage				$800.00	S	Based on Residential Customers
	Vehicles R&M				$1,000.00	S	Based on Residential Customers
	United Water fire Flow				$3,500.00		Estimated
	Utilities				$1,000.00	S	Estimated
	Contract Services (Repair)				$12,000.00	S	Estimated
	Contract Services (Inspections)				$30,000.00	S	Inspection at Developer's expense, See Revenue
	Reserve for Water System R&M				$120,000.00		Estimated
	Reserve for Equipment and Building Replacement				$20,000.00	S	Estimated
	Legal Services				$60,000.00		Estimated
	Auditor Services				$2,500.00		Estimated
	Engineer Services				$30,000.00		Estimated
	Administrative Services (Ovhd of City Hall Admin)				$60,000.00		Estimated
					$930,100.00		
	TOTAL FIXED OPERATING COSTS:				$1,289,000.00		

	CAPITAL EXPENDITURES					Page 3
		2007			2008	
		Budgeted	Actual	Unrealized	Projected	
	Land Acquisition				$0.00	
	Capital Construction Projects					
	Construct Storage Reservoir, 1 MG				$1,590,000.00	Storage Reservoir - State Revolving Loan
	Trunk Line from Well No. 6 to Linder Trunk Line, DA				$2,200,000.00	Developer driven line item - placeholder
	Upgrade Well House				$0.00	EWC Well house repair
	Construct Hookups				$70,000.00	Actual equipment cost
	Extend Water Lines				$100,000.00	Developer driven line item - placeholder
	Late Comer's Cost Reimbursement, DA				$40,000.00	Developer driven line item - placeholder
	WCE Reimbursement, Development Agreement				$85,000.00	Developer driven line item - placeholder
	Update Combined Water System Master Plan				$80,000.00	Scheduled
	TOTAL CAPITAL EXPENDITURES				$4,165,000.00	
	WATER FUND - DEQ LOAN FUND					Page 4
		2007			2008	
		Budgeted	Actual	Unrealized	Projected	
	Same as Presented					
	WATER FUND - SUPPLY & TRUNK LINE FEES					Page 5
		2007			2008	
		Budgeted	Actual	Unrealized	Projected	
	REVENUES					
	Carry Over				$0.00	Cannot carry over what was not received???
	Supply Trunk Line Fees				$300,000.00	200 building permits excluding Legacy/Eaglefield
	TOTAL SUPPLY TRUNK LINE FEES				$300,000.00	
	EXPENDITURES					
	Water System Expansion - STL Fees				$300,000.00	None of this Fund planned for 07-08 expenditure, need to accrue to construct western storage reservoir
	TOTAL WATER SYSTEM BUDGET - ALL ACCOUNTS				$5,754,000.00	

TABLE OF CONTENTS
Update-1 APPENDICES A – L
March 2008

APPENDIX A – Ownership Documents- Legacy and Eaglefield Final Plats and Easements (signed copies at City Hall)

APPENDIX B – Operating Contract

System Inventory Detail

Western Area Water Line Map - 2007

APPENDIX C –Agency and Engineer Certifications

APPENDIX D – Un-changed from Master Plan Dated November 2005

APPENDIX E – Un-changed from Master Plan Dated November 2005

APPENDIX F – Eaglefield and Legacy Well Data

APPENDIX G – Water Rights Documents

Declining Balance Worksheet

APPENDIX H – Laboratory Test Results

Coliform Sampling Plan

Modeling results for Western Area

Modeling results for Eastern Area

APPENDIX I – Operation and Maintenance

APPENDIX J – Un-changed from Master Plan Dated November 2005

APPENDIX K – Emergency Response Plan

APPENDIX L – Manufacturers' Maintenance Manuals (on file at City Hall)

APPENDIX A

RECORD DRAWING

FINAL PLAT FOR
EAGLEFIELD ESTATES SUBDIVISION NO. 1

A PORTION OF LOTS 1, 2, 3, 6, 7 AND 8 OF NEWELL'S ACREAGE
AND THE SW 1/4 OF SECTION 11
TOWNSHIP 4 NORTH, RANGE 1 WEST, BOISE MERIDIAN
CITY OF EAGLE, ADA COUNTY, IDAHO
2007

LOT SUMMARY	
TOTAL LOTS	135
TOTAL BUILDABLE	116
TOTAL COMMON	19
TOTAL ACREAGE	35.75

HEALTH CERTIFICATE

Sanitary restrictions as required by Idaho Code, Title 50, Chapter 13 have not been satisfied and are in force for the following lots: ALL LOTS OF SUBDIVISION

No owner shall construct any building, dwelling, or shelter which necessitates the supplying of water or sewage facilities for persons using such premises until sanitary restriction requirements are satisfied and lifted.

CENTRAL DISTRICT HEALTH DEPARTMENT

DATE

LINE TABLE		
#	LENGTH	BEARING
L1	129.81'	S86°36'01"E
L2	92.21'	N01°36'40"W
L3	30.01'	N88°20'00"E
L4	48.86'	N88°21'00"E
L5	30.11'	S88°16'17"E
L6	32.37'	N88°40'00"E
L7	99.21'	N00°12'17"W
L8	78.79'	N00°01'00"W
L9	52.01'	N78°00'00"W
L10	82.21'	N01°36'40"E
L11	120.81'	N86°36'01"W
L12	78.55'	N00°12'00"E
L13	32.37'	S01°36'00"W
L14	108.06'	N00°12'00"E
L15	93.83'	S72°36'41"E
L16	83.61'	N00°12'17"E
L17	65.48'	N77°36'41"E
L18	28.11'	N00°12'17"E
L19	93.83'	S00°12'17"W
L20	78.00'	S00°10'14"W

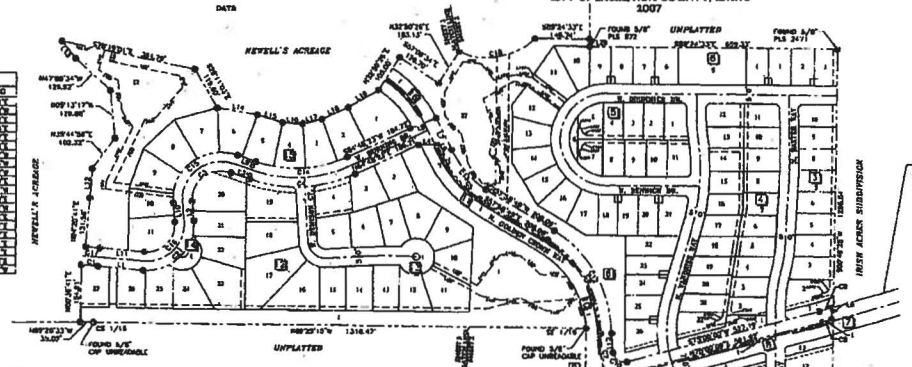

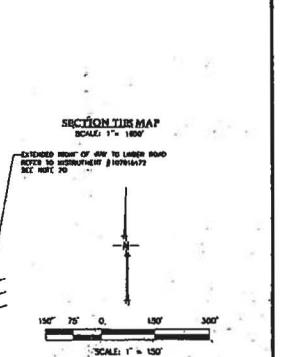

LEGEND

- PROPERTY BOUNDARY
- CENTERLINE
- RIGHT-OF-WAY LINE
- LOT LINE
- EASEMENT LINE
- LANDSCAPE EASEMENT LINE
- SECTION LINE
- EXISTING BOUNDARY LINE
- EXISTING BASIS OF WAY
- TIE LINE
- FOUND ALUMINUM CAP
- FOUND 5/8" IRON PIN
- FOUND BRASS CAP
- FOUND IRON SPIKE
- SET 5/8" X 30" IRON PIN WITH PLASTIC CAP, PLS 7729
- SET 1/2" X 24" IRON PIN WITH PLASTIC CAP, PLS 7729
- CALC POINT
- LOT NUMBER
- BLOCK NUMBER

NOTES:

1) A SIXTEEN FOOT (16') WIDE PERMANENT PUBLIC UTILITIES, PROPERTY DRAINAGE, AND IRRIGATION EASEMENT (P.U.D.I.) IS HEREBY RESERVED ADJACENT TO ALL PUBLIC STREETS. A TWELVE FOOT (12') WIDE PERMANENT PUBLIC UTILITIES, PROPERTY DRAINAGE, AND IRRIGATION EASEMENT (P.U.D.I.) IS HEREBY RESERVED ADJACENT TO ALL REAR LOT LINES, UNLESS OTHERWISE SHOWN. THIS EASEMENT SHALL NOT PRECLUDE THE CONSTRUCTION OF HARD SURFACE DRIVEWAYS TO EACH LOT. EACH SIDE OF INTERIOR LOT LINES SHALL HAVE A FIVE FOOT (5') WIDE PERMANENT PUBLIC UTILITIES AND DRAINAGE EASEMENT.
2) ANY RESUBMISSION OF THIS PLAT SHALL COMPLY WITH THE APPLICABLE REGULATIONS IN EFFECT AT THE TIME OF RESUBMISSION.
3) MINIMUM BUILDING SETBACK LINES SHALL BE IN ACCORDANCE WITH THE APPLICABLE ZONING AND SUBDIVISION REGULATIONS AT THE TIME OF ISSUANCE OF THE BUILDING PERMIT OR AS SPECIFICALLY APPROVED AND/OR REQUIRED.
4) IRRIGATION WATER HAS BEEN PROVIDED BY MIDDLETON IRRIGATION ASSOCIATION FROM THE EAGLEFIELD PUMP STATION, IN COMPLIANCE WITH IDAHO CODE 31-3805 (B). EAGLEFIELD ESTATES SUBDIVISION WILL BE ENTITLED TO IRRIGATION WATER RIGHTS AND THE HOMEOWNER'S ASSOCIATION WILL BE OBLIGATED FOR ASSESSMENTS FROM MIDDLETON IRRIGATION ASSOCIATION. OCAR'S ADDRESS IRRIGATION ASSESSMENTS TO HOMEOWN. LOTS.
5) ALL LOTS IN THIS SUBDIVISION ARE SINGLE FAMILY RESIDENTIAL LOTS, EXCEPT LOTS 1 AND 13, BLOCK 1, LOT 1, BLOCK 2, LOT 1, BLOCK 3, LOT 1, BLOCK 4, LOT 8, BLOCK 5, LOT 8 AND 27, BLOCK 6, LOT 1, BLOCK 7, LOT 1, BLOCK 8, LOT 1, BLOCK 9, LOT 1, BLOCK 10, LOT 1, BLOCK 11, LOT 1, BLOCK 12, LOT 1, BLOCK 13, LOT 1, BLOCK 14, LOT 1 AND 12, BLOCK 15, AND LOT 1, BLOCK 16 WHICH ARE DESIGNATED AS COMMON AREA LOTS TO BE OWNED AND MAINTAINED BY THE EAGLEFIELD ESTATES HOMEOWNER'S ASSOCIATION, AND COMMON LOTS HAVE A BLANKET PRESSURE IRRIGATION EASEMENT FOR THE USE AND BENEFIT OF THE EAGLEFIELD ESTATES HOMEOWNER'S ASSOCIATION.
6) MAINTENANCE OF ANY IRRIGATION OR DRAINAGE PIPE OR DITCH CROSSING A LOT IS THE RESPONSIBILITY OF THE LOT OWNER UNLESS SUCH RESPONSIBILITY IS ASSUMED BY AN IRRIGATION/DRAINAGE DISTRICT OR THE HOMEOWNER'S ASSOCIATION.
7) THIS DEVELOPMENT RECOGNIZES SECTION 22-4503 OF THE IDAHO CODE, RIGHT TO FARM ACT, WHICH STATES: "NO AGRICULTURAL OPERATION OR AN APPURTENANCE TO IT SHALL BE OR BECOME A NUISANCE, PRIVATE OR PUBLIC, BY ANY CHANGED CONDITIONS IN OR ABOUT THE SURROUNDING NON-AGRICULTURAL ACTIVITIES AFTER THE SAME HAS BEEN IN OPERATION FOR MORE THAN ONE (1) YEAR, WHEN THE OPERATION WAS NOT A NUISANCE AT THE TIME THE OPERATION BEGAN; PROVIDED THAT THE PROVISIONS OF SUCH SECTION SHALL NOT APPLY WHENEVER A NUISANCE RESULTS FROM THE IMPROPER OR NEGLIGENT OPERATION OF ANY AGRICULTURAL OPERATION OR APPURTENANCE TO IT."
8) A PORTION OF LOTS 1, 3 AND 4, BLOCK 1, LOT 27, BLOCK 6, LOTS 1, 18 AND 11, BLOCK 12, AND LOTS 9, 10, AND 13, BLOCK 16, AND SURROUND TO AND CONTAIN THE ACHD STORM WATER DRAINAGE SYSTEM. THESE LOTS ARE ENCUMBERED BY THAT CERTAIN WATER PERPETUAL STORM WATER DRAINAGE EASEMENT RECORDED ON JUNE 1, 2004 AS INSTRUMENT NO. 104086411, OFFICIAL RECORDS OF ADA COUNTY, AND INCORPORATED HEREIN BY THIS REFERENCE AS IF SET FORTH IN FULL (SEE "WATER EASEMENT"). THE WATER EASEMENT AND THE STORM WATER DRAINAGE SYSTEM ARE DEDICATED TO ACHD PURSUANT TO SECTION 40-2302 IDAHO CODE. THE WATER EASEMENT IS FOR THE OPERATION AND MAINTENANCE OF THE STORM WATER DRAINAGE SYSTEM.
9) SELECT LOT LINES, AS SHOWN, HAVE A PERMANENT IRRIGATION EASEMENT FOR THE PURPOSE OF INSTALLATION AND MAINTENANCE OF PRESSURE IRRIGATION FOR THE BENEFIT OF THE EAGLEFIELD ESTATES HOMEOWNER'S ASSOCIATION.
10) LOT 1, BLOCK 1, HAS A TWENTY FIVE FOOT (25') WIDE IRRIGATION EASEMENT, AS SHOWN, FOR MIDDLETON MILL DITCH COMPANY AND MIDDLETON IRRIGATION ASSOCIATION INC. FOR THE MAINTENANCE, CLEANING, AND REPAIR OF THE MILL CANAL.
11) THE BOTTOM ELEVATION OF STRUCTURAL FOOTINGS SHALL BE SET A MINIMUM OF 12-INCHES ABOVE THE HIGHEST ESTABLISHED NORMAL GROUND WATER ELEVATION.
12) DIRECT LOT ACCESS TO N. COLDER CROWN WAY AND W. ESCALANTE DR. IS PROHIBITED UNLESS SPECIFICALLY APPROVED BY BOTH ADA COUNTY HIGHWAY DISTRICT AND CITY OF EAGLE.
13) AN ACHD SIDEWALK EASEMENT IS LOCATED ADJACENT TO ALL PUBLIC STREETS PER INSTRUMENT #107016016. SAID EASEMENT PARALLELS 0.5' OUTSIDE OF THE SIDEWALK.
14) LOTS 3-12, BLOCK 1; 3-5, BLOCK 2; 3-10, BLOCK 3; 1-32, BLOCK 4; 1-5 AND 7-11, BLOCK 5 ARE SUBJECT TO COMMON DRIVEWAY EASEMENT LINES AS SHOWN WHICH SHALL PROVIDE PERPETUAL INGRESS AND EGRESS FOR ADJACENT LOTS. MAINTENANCE FOR SAID DRIVEWAYS ARE PROVIDED FOR IN THE COVENANTS, CONDITIONS, AND RESTRICTIONS (CC&RS) PROVIDED FOR THIS SUBDIVISION. SAID EASEMENT SHALL RUN WITH THE LAND AND ALSO HAVE A BLANKET PUBLIC UTILITY, IRRIGATION AND DRAINAGE EASEMENT.
15) A THIRTY FOOT (30') WIDE SEWER AND WATER OPERATION AND MAINTENANCE EASEMENT IS HERE BY GRANTED ON LOTS 1, 5 AND 9, BLOCK 1, AS SHOWN TO EAGLE SEWER DISTRICT AND CITY OF EAGLE WITH A 20' WIDE CLEAR ZONE OF NO TREES WITHIN SAID EASEMENT.
16) A THIRTY FOOT (30') WIDE SEWER OPERATION AND MAINTENANCE EASEMENT IS HERE BY GRANTED ON LOT 12, BLOCK 6 AS SHOWN TO EAGLE SEWER DISTRICT WITH A 20' WIDE CLEAR ZONE OF NO TREES WITHIN SAID EASEMENT.
17) SELECT LOT LINES, AS SHOWN, HAVE A LANDSCAPE EASEMENT FOR THE PURPOSE OF MAINTAINING LANDSCAPE BUFFERS FOR THE USE AND BENEFIT OF THE EAGLEFIELD ESTATES HOMEOWNER'S ASSOCIATION. THE TEN (10) FOOT EASEMENT ALONG W. ESCALANTE DR. HAS BEEN PROVIDED TO MEET A THIRTY (30) FOOT LANDSCAPE BUFFER REQUIREMENT IN ACCORDANCE WITH EAGLE CITY CODE.
18) PORTIONS OF LOTS 1, 11 THROUGH 17 AND 23 THROUGH 27, BLOCK 12, HAVE AN EXISTING DRAINAGE EASEMENT AS SHOWN RESERVED FOR DRAINAGE DISTRICT NO. 1 AS MORE FULLY DESCRIBED IN INSTRUMENT #107023487 RECORDS OF ADA COUNTY
19) LOTS 1 THROUGH 4, 5-8, 16-21 AND 33-36, BLOCK 6, ARE SUBJECT TO A 20 FOOT BY 30 FOOT SHARED ACCESS EASEMENT CONTAINING A COMMON DRIVEWAY
20) SUBDIVISION IS SUBJECT TO CONSTRUCTION OF W. ESCALANTE DR. TO ENDER. REFER TO THE DEVELOPMENT AGREEMENT WITH THE CITY OF EAGLE.

CURVE TABLE				
#	LENGTH	RADIUS	DELTA	CHORD BRG
C1	42.24'	2073.00'	0°30'08"	S88°13'55"E
C2	218.38'	173.00'	108°03'40"	N43°03'01"E
C3	149.81'	73.00'	117°57'27"	N58°15'36"E
C4	261.30'	173.00'	86°31'08"	S87°15'00"E
C5	184.00'	200.00'	37°46'12"	S88°20'37"E
C6	201.18'	304.00'	37°57'04"	S88°21'17"E
C7	124.45'	425.00'	16°47'24"	S88°07'40"E
C8	24.87'	25.00'	57°01'00"	S01°36'40"E
C9	33.00'	25.00'	75°37'27"	S01°36'40"E
C10	81.11'	30.00'	92°37'27"	S01°36'40"E

CURVE TABLE				
#	LENGTH	RADIUS	DELTA	CHORD
C11	33.97'	25.00'	77°37'27"	S01°37'27"E
C12	333.00'	325.00'	57°37'24"	S28°36'41"E
C13	147.12'	275.00'	31°48'22"	S15°24'26"E
C14	234.82'	375.00'	44°43'15"	S42°36'06"E
C15	149.00'	125.00'	114°41'37"	S38°20'34"E
C16	131.42'	75.00'	100°00'54"	S14°36'01"E
C17	37.37'	425.00'	5°01'35"	S01°37'27"E
C18	118.55'	175.00'	38°12'26"	S20°43'13"E
C19	87.76'	125.00'	40°13'27"	S77°37'27"E
C20	87.76'	125.00'	40°13'27"	S77°37'27"E
C21	87.76'	125.00'	40°13'27"	S77°37'27"E

DRAWING NO: C04023_02A_FP SHEET NO. 1 OF 8

LANDMARK SURVEYING & PLANNING, INC.

PLAN REVISION RESPONSES		
NO.		
A	SEE SET	PER AGENCY COMMENTS 10/18/06
A	REVISED	PER AGENCY COMMENTS 11/17/06
A	REVISED	PER AGENCY COMMENTS 01/24/07
A	REVISED	PER AGENCY COMMENTS 01/24/07
A	FINAL	VERIFICATION THE SHEET RUN 03-13-07
A	12-26-06	11-13-07

DATE: 03-13-07
SCALE: 1" = 150'
DRAWN BY: MDM
DESIGNED BY: JOE ROSEBERRY, E.I.T.
CHECKED BY: JOHN CARPENTER, P.E.

IMPROVEMENT PLANS FOR
EAGLEFIELD ESTATES SUBDIVISION NO. 1
FINAL PLAT - PHASE 1
SHEET - 1
CITY OF EAGLE IDAHO

PROJECT NO. C04023

SHEET 2A OF 45

WELL LOT AND WATER WELL ACCESS EASEMENT

THIS WELL LOT AND WATER WELL ACCESS EASEMENT, made this ____ day of January, 2008, between **EAGLEFIELD, LLC** of 6951 N. Duncan Ln., Boise, ID 83714 (hereinafter "EAGLEFIELD"), the **CITY OF EAGLE**, a municipal corporation, situated in the County of Ada, State of Idaho, (hereinafter "CITY OF EAGLE").

WITNESSETH

EAGLEFIELD, for good and valuable consideration, the receipt and sufficiency of which is hereby acknowledged, does by these presents grant forever unto the CITY OF EAGLE, its successors and assigns, for the purpose of installing a public water system, along with the necessary appurtenances thereto, full and free right to enter upon the real property of EAGLEFIELD, utilizing the well lot easement and water well access easement described in the attached Exhibits A and B, both situated on the real property of EAGLEFIELD, as depicted on the attached Exhibit C.

This easement is made subject to the following terms and conditions:

1. The easement described above is hereby perpetually reserved for the utility purpose herein set forth and no structures other than those for such utility purposes are to be erected within the limits of said easement.

2. The CITY OF EAGLE shall have the right at any time to cut, trim, and clear all trees, brush, and other obstructions that may injure, endanger, or interfere with the construction, operation, or maintenance of said utility.

3. In exercising the rights granted herein, the CITY OF EAGLE will not unreasonably interfere with the normal use of the premises and will, at its sole cost and

expense and with due diligence, restore the premises to its original or better condition following any use of the easement either for construction, repair, maintenance, and/or replacement of said facilities and appurtenances thereto.

TOGETHER with the right of ingress and egress on said real property for the purpose of constructing, operating and maintaining said facilities and the necessary appurtenances thereto.

IN WITNESS WHEREOF, the party of the first part has hereunto set their hand and seal the day and year first above written.

EAGLEFIELD, LLC

By: _____

Its: _____

CITY OF EAGLE

By: _____

Its: _____

STATE OF IDAHO)
) ss:
County of Ada)

On this ___ day of _____, 2008, before me, the undersigned, a notary public in and for said State personally appeared _____ who, being first duly sworn, declared that he is the _____ of EAGLEFIELD, LLC that he signed the foregoing document as _____ of Eaglefield, LLC and is authorized to executed the foregoing instrument on behalf of said Eaglefield, LLC.

_____
Notary Public for Idaho
Residing at _____, Idaho
Commission expires _____

STATE OF IDAHO)
) ss:
County of Ada)

On this ___ day of _____, 2008, before me, the undersigned, a notary public in and for said State personally appeared _____ who, being first duly sworn, declared that he/she is the _____ of the **CITY OF EAGLE**, the he/she signed the foregoing document as _____ of the City of Eagle and is authorized to executed the foregoing instrument on behalf of said City of Eagle.

_____
Notary Public for Idaho
Residing at _____, Idaho
Commission expires _____

EXHIBIT A

(Well Lot Easement)

A water well easement located in the NW1/4 of the SE1/4 Section 11, T.4N., R.1W., B.M., Ada County, Idaho more particularly described as follows:

Commencing at the SE corner of said Section 11;

thence along the East boundary line of said Section 11 North 00°49'15" East, 2645.20 feet to the E1/4 corner of said Section 11;

thence along the East-West centerline of said Section 11 North 89°24'32" West, 1320.32 feet to the C-E1/16 of said Section 11;

thence continuing along said East-West centerline North 89°24'56" West, 1320.41 feet to the C1/4 of said Section 11;

thence South 36°01'08" East, 159.17 feet to a point on a curve to the left, said point also being the **REAL POINT OF BEGINNING** of said easement;

thence along said curve 40.04 feet, said curve having a radius of 275.00 feet, a central angle of 08°20'29" and a long chord of 40.00 feet which bears North 48°55'04" East;

thence South 46°08'25" East, 155.40 feet;

thence South 26°56'44" East, 82.45 feet;

thence South 84°31'59" West, 139.84 feet;

thence North 13°29'24" West, 172.98 feet to the **REAL POINT OF BEGINNING,** containing 18,759 square feet, more or less.

EXHIBIT B

(Water Well Access Easement)

A 30.00-foot wide access easement located in the NW1/4 of the SE1/4 Section 11, T.4N., R.1W., B.M., Ada County, Idaho more particularly described as follows:

Commencing at the SE corner of said Section 11;

thence along the East boundary line of said Section 11 North 00°49'15" East, 2645.20 feet to the E1/4 corner of said Section 11;

thence along the East-West centerline of said Section 11 North 89°24'32" West, 1320.32 feet to the C-E1/16 of said Section 11;

thence continuing along said East-West centerline North 89°24'56" West, 1320.41 feet to the C1/4 of said Section 11;

thence South 82°59'56" East, 148.83 feet to the **REAL POINT OF BEGINNING** of said access easement;

thence South 59°59'59" East, 46.83 feet to the beginning of a curve to the right;

thence along said curve 181.72 feet , said curve having a radius of 315.00 feet, a central angle of 33°03'15" and a long chord of 179.22 feet which bears South 43°28'22" East to the point of tangency;

thence South 26°56'44" East, 67.51 feet to the beginning of a curve to the left;

thence along said curve 166.69 feet, said curve having a radius of 585.00 feet, a central angle of 16°19'34" and a long chord of 166.13 feet which bears South 35°06'31" East to the point of tangency;

thence South 43°16'18" East, 165.46 feet to the beginning of a curve to the left;

thence along said curve 141.80 feet, said curve having a radius of 585.00 feet, a central angle of 13°53'16" and a long chord of 141.45 feet which bears South 50°12'56" East to the point of tangency;

thence South 57°09'34" East, 134.05 feet;

thence South 32°50'26" West, 30.00 feet;

thence North 57°09'34" West, 134.05 feet to the beginning of a curve to the right;

thence along said curve 149.07 feet, said curve having a radius of 615.00 feet, a central angle of 13°53'16" and a long chord of 148.71 feet which bears North 50°12'56" West to the point of tangency;

thence North 43°16'18" West, 165.46 feet to the beginning of a curve to the right;

thence along said curve 175.24 feet, said curve having a radius of 615.00 feet, a central angle of 16°19'34" and a long chord of 174.65 feet which bears North 35°06'31" West to the point of tangency;

thence North 26°56'44" West, 67.51 feet to the beginning of a curve to the left;

thence along said curve 164.42 feet, said curve having a radius of 285.00 feet, a central angle of 33°03'15" and a long chord of 162.15 feet which bears North 43°28'21" West to the point of tangency;

thence North 59°59'59" West, 16.78 feet to the beginning of a non-tangent curve to the right;

thence along said curve 95.81 feet, said curve having a radius of 275.00 feet, a central angle of 19°57'40" and a long chord of 95.32 feet which bears South 43°06'28" West;

thence North 36°54'42" West, 30.00 feet to the beginning of a non-tangent curve to the left;

thence along said curve 113.73 feet, said curve having a radius of 245.00 feet, a central angle of 26°35'53" and a long chord of 112.72 feet which bears North 39°47'22" East to the **REAL POINT OF BEGINNING.**

EXHIBIT C

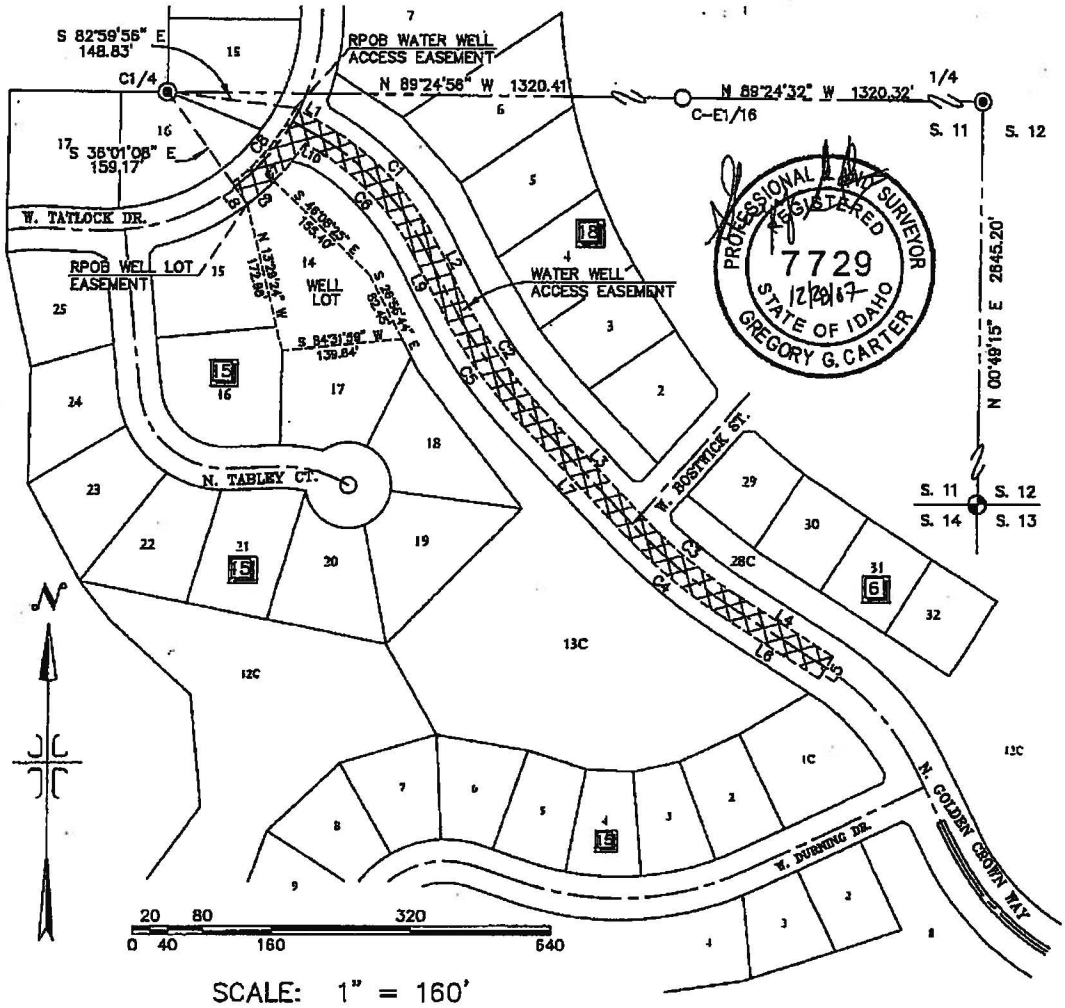

LINE TABLE		
LINE	LENGTH	BEARING
L1	46.83	N59°59'59"W
L2	67.51	N26°56'44"W
L3	165.46	N43°16'18"W
L4	134.05	N57°09'34"W
L5	30.00	N32°50'26"E
L6	134.05	N57°09'34"W
L7	165.46	N43°16'18"W
L8	30.00	N36°54'42"W
L9	67.51	N26°56'44"W
L10	16.78	N59°59'59"W

CURVE TABLE					
Curve	Radius	Length	Chord Dist.	Chord Brg.	Delta
C1	315.00	181.72	179.22	N 43°28'21" W	33°03'18"
C2	585.00	166.69	166.13	S 35°06'31" E	16°18'34"
C3	585.00	141.80	141.45	S 50°12'56" E	13°53'16"
C4	615.00	149.07	148.71	S 50°12'56" E	13°53'16"
C5	615.00	175.24	174.65	S 35°06'31" E	16°18'34"
C6	285.00	164.42	162.15	N 43°28'21" W	33°03'18"
C7	275.00	95.61	95.32	N 43°08'28" E	19°57'40"
C8	245.00	113.73	112.72	N 38°47'21" E	26°35'53"
C9	275.00	40.04	40.00	N 48°55'04" E	8°20'29"

FINAL PLAT SHOWING

MOSCA SECA SUBDIVISION NO.1

LOCATED IN THE N 1/2 OF SECTION 11,
T.4N., R.1W., B.M.
EAGLE, IDAHO
2008

• STANLEY CONSULTANTS •
MERIDIAN, IDAHO

200 100 0 200 400 600
SCALE IN FEET

LEGEND

- FOUND ALUMINUM CAP
- FOUND BRASS CAP
- SET 5/8" X 30" REBAR WITH PLASTIC CAP, PLS 4998
- SET 1/2" X 24" REBAR WITH PLASTIC CAP, PLS 4998
- FOUND 5/8" REBAR WITH PLASTIC CAP
- CALCULATED POINT (NOT SET)
- LOT NUMBER
- PROPERTY BOUNDARY
- EASEMENT LINE (SEE NOTE 1, 2, & 3)
- CENTERLINE
- LOT LINE
- RIGHT-OF-WAY LINE
- SECTION LINE
- TIE LINE

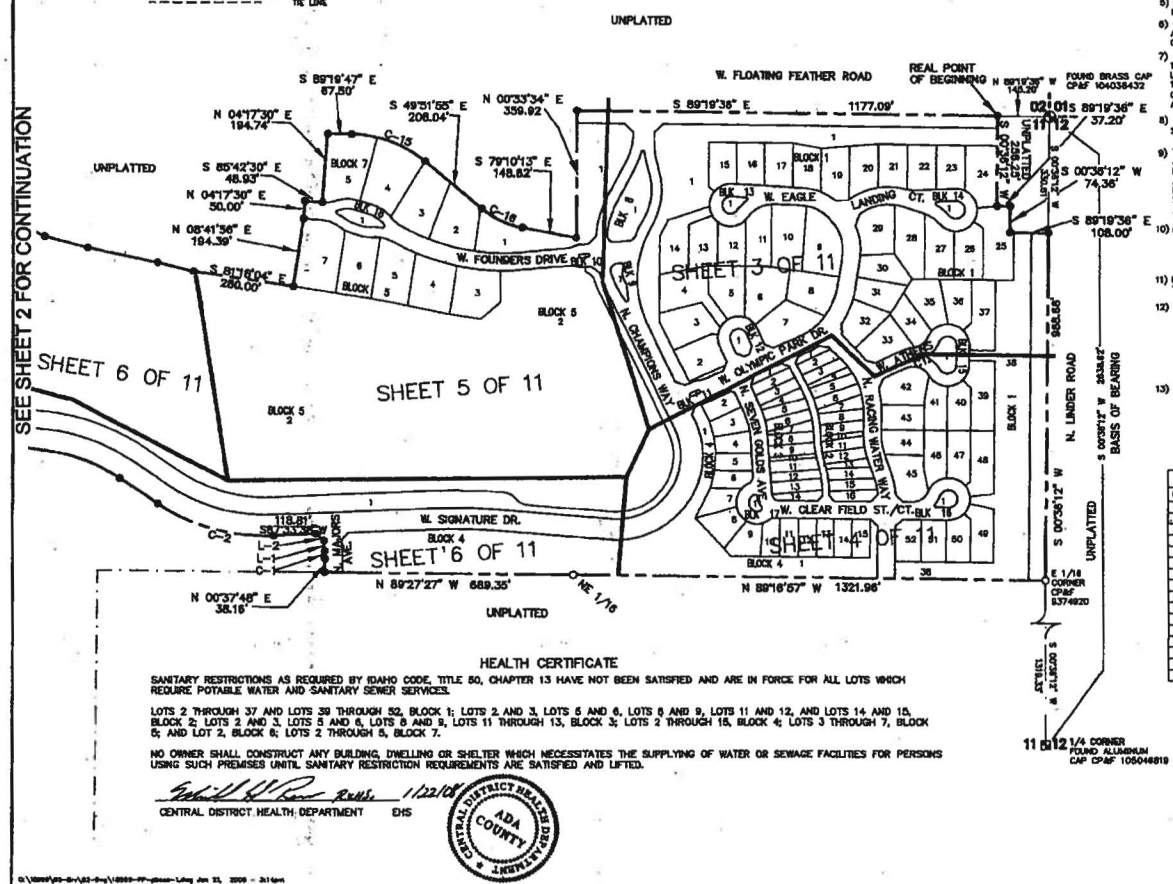

NOTES

1) UNLESS OTHERWISE DESIGNATED OR DIMENSIONED, THERE SHALL BE A PERMANENT EASEMENT FOR PUBLIC UTILITIES, LOT DRAINAGE, SEWER, IRRIGATION AND STREET LIGHTS OVER THE TWELVE (12) FEET ADJACENT TO ANY PUBLIC STREET AS PER EAGLE CITY CODE 9.3.B. THIS EASEMENT SHALL NOT PRECLUDE THE CONSTRUCTION OF HARD-SURFACED DRIVEWAYS AND WALKWAYS TO EACH LOT. THE EASEMENTS ON BUILDABLE LOTS ARE SHOWN ON THE FINAL PLAT AND EASEMENTS ON THE COMMON LOTS ARE NOT SHOWN.

2) UNLESS OTHERWISE DESIGNATED OR DIMENSIONED, THERE SHALL BE A SIX (6) FOOT PROPERTY DRAINAGE, PUBLIC UTILITY AND IRRIGATION EASEMENT ADJACENT TO ALL SIDE LOT LINES ON LOTS 12,000 SQUARE FEET AND OVER, AS PER DEVELOPMENT AGREEMENT RZ-13-05 THE SIDE LOT LINE EASEMENT ON LOTS UNDER 12,000 SQUARE FEET SHALL BE FIVE (5) FOOT TO MATCH BUILDING SETBACKS. THE EASEMENTS ON BUILDABLE LOTS ARE SHOWN ON THE FINAL PLAT AND EASEMENTS ON THE COMMON LOTS ARE NOT SHOWN.

3) UNLESS OTHERWISE DESIGNATED OR DIMENSIONED, THERE SHALL BE A TWELVE (12) FOOT PROPERTY DRAINAGE, PUBLIC UTILITY AND PRESSURE IRRIGATION EASEMENT ADJACENT TO ALL REAR LOT LINES INSIDE THIS SUBDIVISION. THE EASEMENTS ON BUILDABLE LOTS ARE SHOWN ON THE FINAL PLAT AND EASEMENTS ON THE COMMON LOTS ARE NOT SHOWN.

4) ALL LOT, PARCEL, AND TRACT SIZES SHALL MEET DIMENSIONAL STANDARDS AS ESTABLISHED IN THE EAGLE CITY ZONING ORDINANCE OR AS SPECIFICALLY APPROVED BY THE CONDITIONS OF DEVELOPMENT FOR CITY OF EAGLE RZ-13-05. INSTRUMENT NO. 106101990.

5) NO LOTS WITHIN THIS SUBDIVISION SHALL BE ALLOWED TO TAKE DIRECT ACCESS FROM N. LINDER ROAD, N. CHAMPIONS WAY, W. FLOATING FEATHER ROAD, W. ACADEMY DRIVE, OR W. SIGNATURE DRIVE.

6) MINIMUM BUILDING SETBACK LINES SHALL BE IN ACCORDANCE WITH THE EAGLE CITY ZONING ORDINANCE AT THE TIME OF THE ISSUANCE OF THE BUILDING PERMIT OR AS SPECIFICALLY APPROVED BY THE CONDITIONS OF DEVELOPMENT FOR THE CITY OF EAGLE RZ-13-05. INSTRUMENT NO. 106101990.

7) LOTS 1, 8 & 38 BLOCK 1; LOTS 1, 4, 7, 10, 13, & 18, BLOCK 2; LOTS 1, 4, 7, 10, & 14, BLOCK 3; LOT 1, BLOCK 4; LOT 1, BLOCK 5; LOT 1, BLOCK 6; LOT 1, OF BLOCK 7; LOT 1, BLOCK 8; LOT 1, BLOCK 9; LOT 1, BLOCK 10; LOT 1 BLOCK 11; LOT 1 BLOCK 12; LOT 1 BLOCK 13; LOT 1 BLOCK 14; LOT 1 BLOCK 15; LOT 1, BLOCK 16; LOT 1, BLOCK 17; LOT 1, BLOCK 18; LOT 1, OF BLOCK 19; ARE DESIGNATED AS A COMMON AREA LOTS AND WILL BE OWNED AND MAINTAINED BY THE MOSCA SECA HOMEOWNER'S ASSOCIATION AS ESTABLISHED IN THE CONDIANTS.

8) LOT 2, BLOCK 5; AND LOT 2, BLOCK 6; ARE ACADEMY OPEN SPACE LOTS AND SHALL BE MAINTAINED BY SIGNATURE ACADEMIES IDAHO, LLC. OR IT'S ASSIGNS.

9) THIS DEVELOPMENT RECOGNIZES IDAHO CODE§ 22-4503, RIGHT TO FARM ACT, WHICH STATES "NO AGRICULTURAL OPERATION OR AN APPURTENANCE TO IT SHALL BE OR BECOME A NUISANCE, PRIVATE OR PUBLIC BY ANY CHANGED CONDITIONS IN OR ABOUT THE SURROUNDING NON AGRICULTURAL ACTIVITIES AFTER THE SAME HAS BEEN IN OPERATION FOR MORE THAN ONE (1) YEAR, WHEN THE OPERATION WAS NOT A NUISANCE AT THE TIME THE OPERATION BEGAN; PROVIDED THAT THE PROVISIONS OF THIS SECTION SHALL NOT APPLY WHENEVER A NUISANCE RESULTS FROM THE IMPROPER OR NEGLIGENT OPERATION OF ANY AGRICULTURAL OPERATION OR APPURTENANCE TO IT."

10) IRRIGATION WATER HAS BEEN PROVIDED FROM THE MIDDLE IRRIGATION ASSOCIATION, NEW DRY CREEK DITCH CO., AND THE FOOTHILLS IRRIGATION DISTRICT, IN COMPLIANCE WITH IDAHO CODE 31-3805(b). LOTS WITHIN THE SUBDIVISION WILL BE ENTITLED TO IRRIGATION WATER RIGHTS, AND INDIVIDUAL LOTS WILL PAY ASSESSMENTS FROM THE HOMEOWNERS ASSOCIATION.

11) DRAINAGE DISTRICT NUMBER 2 AND MIDDLETON MILL IRRIGATION COMPANIES SHALL BE RESPONSIBLE FOR THE MAINTENANCE OF THE IRRIGATION CANALS WITHIN THIS SUBDIVISION.

12) A PORTION OF LOT 1, BLOCK 1; LOTS 9, 10, 11, AND 12, BLOCK 2; LOT 1, BLOCK 4; LOTS 1 AND 2 BLOCK 5; LOT 1, BLOCK 7; ARE SERVIENT TO AND CONTAIN THE ACHD STORM WATER DRAINAGE SYSTEM. THESE LOTS ARE ENCUMBERED BY THAT CERTAIN MASTER PERPETUAL STORM WATER DRAINAGE EASEMENT RECORDED ON JUNE 1, 2004 AS INSTRUMENT No. 104068411, OFFICIAL RECORDS OF ADA COUNTY, AND INCORPORATED HEREIN BY THIS REFERENCE AS IF SET FORTH IN FULL (THE "MASTER EASEMENT"). THE MASTER EASEMENT AND THE STORM WATER DRAINAGE SYSTEM ARE DEDICATED TO ACHD PURSUANT TO SECTION 40-2302 IDAHO CODE. THE MASTER EASEMENT IS FOR THE OPERATION AND MAINTENANCE OF THE STORM WATER DRAINAGE SYSTEM.

13) UNLESS OTHERWISE DESIGNATED OR DIMENSIONED, THERE SHALL BE A BLANKET EASEMENT FOR PUBLIC UTILITIES, EAGLE SEWER DISTRICT AND IRRIGATION EASEMENT OVER LOT 1, BLOCK 5; LOT 1, BLOCK 12; LOT 1, BLOCK 13; LOT 1 BLOCK 14; LOT 1, BLOCK 15; LOT 1, BLOCK 16; LOT 1, BLOCK 17; LOT 1, BLOCK 18; LOT 1, BLOCK 19.

CURVE TABLE

CURVE	LENGTH	RADIUS	DELTA	TANGENT	CHORD BEARING	CHORD
C-1	22.23'	275.00'	4°37'48"	11.12'	N 01°41'06" W	22.22'
C-2	340.53'	530.00'	36°48'45"	176.37'	N 74°01'58" W	334.70'
C-3	241.75'	470.00'	29°28'15"	123.81'	N 70°21'45" W	239.16'
C-4	421.48'	580.00'	40°55'49"	220.18'	N 64°37'58" W	412.57'
C-5	71.73'	382.00'	10°45'24"	35.97'	S 38°17'09" W	71.63'
C-6	153.01'	320.84'	27°40'56"	78.00'	S 18°03'54" W	153.51'
C-7	120.31'	375.00'	18°24'47"	60.76'	S 03°57'13" E	120.00'
C-8	42.84'	165.00'	14°88'22"	21.44'	S 78°53'18" W	42.72'
C-9	123.25'	336.00'	19°38'33"	61.72'	S 79°28'00" W	121.63'
C-10	36.49'	158.50'	13°30'44"	18.34'	S 58°58'12" W	36.37'
C-11	120.49'	235.01'	28°27'30"	61.60'	S 38°36'34" W	119.17'
C-12	21.06'	185.00'	7°17'33"	10.51'	S 27°34'08" W	20.89'
C-13	10.47'	32.00'	18°44'35"	5.28'	N 77°13'42" E	10.42'
C-14	32.71'	106.00'	18°44'35"	16.50'	N 77°13'42" E	32.57'
C-15	222.75'	333.49'	38°27'39"	115.00'	S 69°35'51" E	218.38'
C-16	127.15'	245.80'	29°18'18"	65.00'	S 64°31'04" E	125.77'

LINE TABLE

LINE	LENGTH	BEARING
L-1	28.86'	N 04°00'00" W
L-2	29.67'	N 48°31'11" W

HEALTH CERTIFICATE

SANITARY RESTRICTIONS AS REQUIRED BY IDAHO CODE, TITLE 50, CHAPTER 13 HAVE NOT BEEN SATISFIED AND ARE IN FORCE FOR ALL LOTS WHICH REQUIRE POTABLE WATER AND SANITARY SEWER SERVICES.

LOTS 2 THROUGH 37 AND LOTS 39 THROUGH 52, BLOCK 1; LOTS 2 AND 3, LOTS 5 AND 6, LOTS 8 AND 9, LOTS 11 AND 12, AND LOTS 14 AND 15, BLOCK 2; LOTS 2 AND 3, LOTS 5 AND 6, LOTS 8 AND 9, LOTS 11 THROUGH 13, BLOCK 3; LOTS 2 THROUGH 13, BLOCK 4; LOTS 3 THROUGH 7, BLOCK 5; AND LOT 2, BLOCK 6; LOTS 2 THROUGH 5, BLOCK 7.

NO OWNER SHALL CONSTRUCT ANY BUILDING, DWELLING OR SHELTER WHICH NECESSITATES THE SUPPLYING OF WATER OR SEWAGE FACILITIES FOR PERSONS USING SUCH PREMISES UNITIL SANITARY RESTRICTION REQUIREMENTS ARE SATISFIED AND LIFTED.

1/22/08
CENTRAL DISTRICT HEALTH DEPARTMENT EHS

CENTRAL DISTRICT HEALTH DEPARTMENT ADA COUNTY

DEVELOPER:
IDAHO DEVELOPMENT SERVICES INC.
EAGLE, IDAHO 83616

PROFESSIONAL LAND SURVEYOR REGISTRATION 4998 STATE OF IDAHO MICHAEL E. MARKS 1/21/08

BOOK ____ PAGE ____

SHEET 1 OF 11
18999 01/11/08

MOSCA SECA SUBDIVISION NO.1

RECEIVED & FILED
CITY OF EAGLE
OCT 1 6 2007
File:
Route to:

CERTIFICATE OF OWNERS

KNOW ALL MEN BY THESE PRESENTS:

THAT IDAHO DEVELOPMENT SERVICES, INC., A CORPORATION ORGANIZED AND EXISTING UNDER THE LAWS OF THE STATE OF IDAHO AND DULY QUALIFIED TO DO BUSINESS IN THE STATE OF IDAHO, DOES HEREBY CERTIFY THAT IT IS THE OWNER OF THE REAL PROPERTY AS DESCRIBED BELOW AND IT IS ITS INTENTION TO INCLUDE SAID REAL PROPERTY IN THIS SUBDIVISION PLAT. THE OWNER ALSO HEREBY CERTIFIES THAT THIS PLAT COMPLIES WITH IDAHO CODE 50-1334, (2). THIS SUBDIVISION WILL RECEIVE DOMESTIC WATER FROM AN EXISTING WATER SYSTEM AND THE CITY OF EAGLE MUNICIPAL WATER SYSTEM HAS AGREED IN WRITING TO PROVIDE DOMESTIC WATER TO ALL RESIDENTIAL LOTS IN THE SUBDIVISION.

A PARCEL OF LAND BEING A PORTION OF NORTH 1/2 OF SECTION 11 TOWNSHIP 4 NORTH, RANGE 1 WEST, BOISE MERIDIAN, CITY OF EAGLE, ADA COUNTY, IDAHO. BEING MORE PARTICULARLY DESCRIBED AS FOLLOWS:

COMMENCING AT THE NORTHEAST CORNER OF SECTION 11, T.4 N., R.1 W., B.M.,

THENCE N 89°19'36" W, 145.20 FEET ALONG THE NORTH LINE OF THE NE ¼ OF THE NE ¼ OF SAID SECTION 11 TO THE REAL POINT OF BEGINNING OF THIS DESCRIPTION;

THENCE S 00°36'12" W, 256.25 FEET TO A POINT;
THENCE S 89°19'36" E, 37.20 FEET TO A POINT;
THENCE S 00°38'12" W, 74.35 FEET TO A POINT;
THENCE S 89°19'36" E, 108.00 FEET TO A POINT ON THE EAST LINE OF SAID SECTION 11;
THENCE S 00°36'12" W, 988.58 FEET TO THE SOUTHEAST CORNER OF THE NORTH ½ OF THE NE ¼ OF SAID SECTION 11;
THENCE N 89°18'57" W, 1321.98 FEET TO THE NORTHEAST 1/16 CORNER OF SAID SECTION 11;
THENCE N 89°27'27" W, 689.35 FEET ALONG THE SOUTH LINE OF THE NORTH ½ OF THE NE ¼ TO A POINT;
THENCE N 00°37'48" E, 38.16 FEET TO A POINT OF CURVATURE;
THENCE 22.22 FEET ALONG A TANGENT CURVE TO THE LEFT, SAID CURVE HAVING A RADIUS OF 275.00 FEET, A DELTA ANGLE OF 04°37'48", A TANGENT LENGTH OF 11.12 FEET AND A CHORD WHICH BEARS N 01°41'06" W FOR A DISTANCE OF 22.22 FEET TO A POINT OF TANGENCY;
THENCE N 04°00'00" W, 29.86 FEET TO A POINT;
THENCE N 48°13'11" W, 28.67 FEET TO A POINT;
THENCE S 87°33'38" W, 118.81 FEET TO A POINT OF CURVATURE;
THENCE 340.52 FEET ALONG A TANGENT CURVE TO THE RIGHT, SAID CURVE HAVING A RADIUS OF 530.00 FEET, A DELTA ANGLE OF 36°48'45", A TANGENT LENGTH OF 176.37 FEET AND A CHORD WHICH BEARS N 74°01'59" W FOR A DISTANCE OF 334.70 FEET TO A POINT OF TANGENCY;
THENCE N 55°37'37" W, 127.16 FEET TO A POINT OF CURVATURE;
THENCE 241.75 FEET ALONG A TANGENT CURVE TO THE LEFT, SAID CURVE HAVING A RADIUS OF 470.00 FEET, A DELTA ANGLE OF 29°28'15", A TANGENT LENGTH OF 123.61 FEET AND A CHORD WHICH BEARS N 70°21'45" W FOR A DISTANCE OF 236.10 FEET TO A POINT OF REVERSED CURVATURE;
THENCE 421.48 FEET ALONG A TANGENT CURVE TO THE RIGHT, SAID CURVE HAVING A RADIUS OF 580.00 FEET, A DELTA ANGLE OF 40°55'49", A TANGENT LENGTH OF 220.18 FEET AND A CHORD WHICH BEARS N 64°37'58" W FOR A DISTANCE OF 412.57 FEET TO A POINT ON A CURVE;
THENCE 71.73 FEET ALONG A NON-TANGENT CURVE TO THE LEFT SAID CURVE HAVING A RADIUS OF 382.00 FEET, A DELTA ANGLE OF 10°45'34", A TANGENT LENGTH OF 35.97 FEET, AND A CHORD WHICH BEARS S 38°17'09" W FOR A DISTANCE OF 71.63 FEET TO A POINT OF COMPOUND CURVATURE;
THENCE 155.01 FEET ALONG A TANGENT CURVE TO THE LEFT, SAID CURVE HAVING A RADIUS OF 320.84 FEET, A DELTA ANGLE OF 27°40'56", A TANGENT LENGTH OF 79.05 FEET AND A CHORD WHICH BEARS S 19°03'54" W FOR A DISTANCE OF 153.51 FEET TO A POINT OF TANGENCY;
THENCE S 05°13'27" W, 28.22 FEET TO A POINT OF CURVATURE;
THENCE 120.51 FEET ALONG A NON-TANGENT CURVE TO THE LEFT SAID CURVE HAVING A RADIUS OF 375.00 FEET, A DELTA ANGLE OF 18°24'47", A TANGENT LENGTH OF 60.78 FEET, AND A CHORD WHICH BEARS S 03°57'13" E FOR A DISTANCE OF 120.00 FEET TO A POINT ON A CURVE;
THENCE S 71°29'04" W, 80.72 FEET TO A POINT OF CURVATURE;
THENCE 42.64 FEET ALONG A TANGENT CURVE TO THE RIGHT, SAID CURVE HAVING A RADIUS OF 165.00 FEET, A DELTA ANGLE OF 14°48'23", A TANGENT LENGTH OF 21.44 FEET AND A CHORD WHICH BEARS S 78°53'15" W FOR A DISTANCE OF 42.52 FEET TO A POINT OF TANGENCY;
THENCE S 86°17'26" W, 145.61 FEET TO A POINT OF CURVATURE;
THENCE 122.25 FEET ALONG A TANGENT CURVE TO THE LEFT, SAID CURVE HAVING A RADIUS OF 356.50 FEET, A DELTA ANGLE OF 19°38'53", A TANGENT LENGTH OF 61.73 FEET AND A CHORD WHICH BEARS S 76°26'00" W FOR A DISTANCE OF 121.65 FEET TO A POINT OF TANGENCY;
THENCE S 66°38'34" W, 132.71 FEET TO A POINT OF CURVATURE;
THENCE 36.45 FEET ALONG A TANGENT CURVE TO THE LEFT, SAID CURVE HAVING A RADIUS OF 156.50 FEET, A DELTA ANGLE OF 13°20'44", A TANGENT LENGTH OF 18.31 FEET AND A CHORD WHICH BEARS S 59°58'12" W FOR A DISTANCE OF 36.37 FEET TO A POINT OF TANGENCY;
THENCE S 53°17'50" W, 58.56 FEET TO A POINT OF CURVATURE;
THENCE 120.49 FEET ALONG A TANGENT CURVE TO THE LEFT, SAID CURVE HAVING A RADIUS OF 235.01 FEET, A DELTA ANGLE OF 29°22'30", A TANGENT LENGTH OF 61.50 FEET AND A CHORD WHICH BEARS S 38°36'34" W FOR A DISTANCE OF 119.17 FEET TO A POINT OF REVERSED CURVATURE;
THENCE 21.00 FEET ALONG A TANGENT CURVE TO THE RIGHT, SAID CURVE HAVING A RADIUS OF 165.00 FEET, A DELTA ANGLE OF 07°17'33", A TANGENT LENGTH OF 10.51 FEET AND A CHORD WHICH BEARS S 27°34'06" W FOR A DISTANCE OF 20.99 FEET TO A POINT ON A CURVE;
THENCE S 00°37'54" W, 578.55 FEET TO A POINT;
THENCE S 20°55'26" W, 374.85 FEET TO A POINT;
THENCE S 00°37'54" W, 229.14 FEET TO A POINT;
THENCE N 89°22'06" W, 659.99 FEET TO A POINT;
THENCE N 00°35'54" E, 1152.08 FEET TO A POINT;
THENCE N 50°21'42" W, 38.62 FEET TO A POINT;
THENCE N 00°35'54" E, 916.92 FEET TO A POINT;
THENCE N 88°19'19" E, 144.47 FEET TO A POINT;
THENCE N 82°38'20" E, 140.51 FEET TO A POINT;
THENCE N 65°11'48" E, 96.03 FEET TO A POINT;
THENCE N 71°23'40" E, 85.56 FEET TO A POINT;
THENCE N 88°19'44" E, 206.64 FEET TO A POINT;
THENCE S 80°28'05" E, 148.31 FEET TO A POINT;
THENCE S 87°40'30" E, 119.50 FEET TO A POINT;
THENCE S 86°05'03" E, 230.35 FEET TO A POINT;
THENCE S 86°58'20" E, 110.00 FEET TO A POINT;
THENCE N 03°01'40" E, 238.11 FEET TO A POINT;
THENCE N 44°48'49" E, 29.83 FEET TO A POINT;
THENCE N 88°35'59" E, 34.06 FEET TO A POINT OF CURVATURE;
THENCE 10.47 FEET ALONG A TANGENT CURVE TO THE LEFT, SAID CURVE HAVING A RADIUS OF 32.00 FEET, A DELTA ANGLE OF 18°44'35", A TANGENT LENGTH OF 5.28 FEET AND A CHORD WHICH BEARS N 77°13'42" E FOR A DISTANCE OF 10.42 FEET TO A POINT OF REVERSED CURVATURE;
THENCE 32.71 FEET ALONG A TANGENT CURVE TO THE RIGHT, SAID CURVE HAVING A RADIUS OF 100.00 FEET, A DELTA ANGLE OF 18°44'35", A TANGENT LENGTH OF 16.50 FEET AND A CHORD WHICH BEARS N 77°13'42" E FOR A DISTANCE OF 32.57 FEET TO A POINT ON A CURVE;
THENCE S 03°24'01" E, 175.00 FEET TO A POINT;
THENCE N 88°35'59" E, 300.00 FEET TO A POINT;
THENCE N 82°06'58" E, 95.12 FEET TO A POINT;
THENCE S 81°06'10" E, 107.07 FEET TO A POINT;
THENCE S 66°20'13" E, 75.83 FEET TO A POINT;
THENCE S 75°00'10" E, 124.75 FEET TO A POINT;
THENCE S 77°46'37" E, 198.11 FEET TO A POINT;
THENCE S 75°57'18" E, 104.45 FEET TO A POINT;
THENCE S 81°18'04" E, 300.00 FEET TO A POINT;
THENCE N 08°41'56" E, 195.93 FEET TO A POINT;
THENCE N 04°17'30" E, 50.00 FEET TO A POINT;
THENCE S 85°42'30" E, 28.87 FEET TO A POINT;
THENCE N 04°17'30" E, 194.74 FEET TO A POINT;
THENCE S 89°19'47" E, 67.50 FEET TO A POINT OF CURVATURE;
THENCE 222.75 FEET ALONG A TANGENT CURVE TO THE RIGHT, SAID CURVE HAVING A RADIUS OF 323.40 FEET, A DELTA ANGLE OF 39°27'52", A TANGENT LENGTH OF 116.00 FEET AND A CHORD WHICH BEARS S 69°35'51" E FOR A DISTANCE OF 218.38 FEET TO A POINT OF TANGENCY;
THENCE S 49°51'55" E, 208.04 FEET TO A POINT OF CURVATURE;
THENCE 127.15 FEET ALONG A TANGENT CURVE TO THE LEFT, SAID CURVE HAVING A RADIUS OF 248.60 FEET, A DELTA ANGLE OF 29°18'18", A TANGENT LENGTH OF 65.00 FEET AND A CHORD WHICH BEARS S 64°31'04" E FOR A DISTANCE OF 125.77 FEET TO A POINT OF TANGENCY;
THENCE S 79°10'13" E, 148.82 FEET TO A POINT;
THENCE N 00°33'34" E, 359.92 FEET TO THE NORTHWEST CORNER OF THE NE ¼ OF THE NE ¼ OF SAID SECTION 11;
THENCE S 89°19'36" E, 1177.09 FEET TO THE REAL POINT OF BEGINNING.

SAID PARCEL CONTAINING 126.71 ACRES, MORE OR LESS. THIS PARCEL IS SUBJECT TO ALL EXISTING EASEMENTS AND RIGHTS OF WAY.

THE PUBLIC STREETS AS SHOWN ON THIS PLAT ARE HEREBY DEDICATED TO THE PUBLIC BUT EASEMENTS AS SHOWN ON THIS PLAT ARE NOT DEDICATED TO THE PUBLIC, BUT THE RIGHT TO USE SAID EASEMENTS IS HEREBY PERPETUALLY RESERVED FOR PUBLIC UTILITIES AND SUCH OTHER USES AS DESIGNATED WITHIN THIS PLAT, AND NO PERMANENT STRUCTURES ARE TO BE ERECTED WITHIN THE LINES OF SAID EASEMENTS.

IN WITNESS WHEREOF, WE HAVE HEREUNTO SET OUR HANDS THIS _____ DAY OF _____, 20___.

IDAHO DEVELOPMENT SERVICES, INC.

_____
PATRICK HOLMES, PRESIDENT

ACKNOWLEDGMENT

STATE OF _____)
) S.S.
COUNTY OF _____)

ON THIS _____ DAY OF _____, BEFORE ME, THE UNDERSIGNED, A NOTARY PUBLIC IN AND FOR SAID STATE, PERSONALLY APPEARED PATRICK HOLMES, KNOWN OR IDENTIFIED TO ME TO BE PRESIDENT OF IDAHO DEVELOPMENT SERVICES, INC., OR THE PERSON WHO EXECUTED THIS INSTRUMENT ON BEHALF OF SAID CORPORATION AND ACKNOWLEDGED TO ME THAT SUCH CORPORATION EXECUTED THE SAME.

IN WITNESS WHEREOF, I HAVE HEREUNTO SET MY HAND AND AFFIXED MY OFFICIAL SEAL THE DAY AND YEAR IN THIS CERTIFICATE FIRST ABOVE WRITTEN.

_____
NOTARY PUBLIC FOR
RESIDING IN
_____
MY COMMISSION EXPIRES

CERTIFICATE OF SURVEYOR

I, MICHAEL E. MARKS, DO HEREBY CERTIFY THAT I AM A PROFESSIONAL LAND SURVEYOR LICENSED BY THE STATE OF IDAHO, AND THAT THIS PLAT AS DESCRIBED IN THE "CERTIFICATE OF OWNERS" WAS DRAWN FROM AN ACTUAL SURVEY MADE ON THE GROUND UNDER MY DIRECT SUPERVISION AND ACCURATELY REPRESENTS THE POINTS PLATTED THEREON, AND IS IN CONFORMITY WITH THE STATE OF IDAHO CODE RELATING TO PLATS AND SURVEYS.

MICHAEL E. MARKS P.L.S.

PROFESSIONAL LAND SURVEYOR REGISTERED 4998 STATE OF IDAHO MICHAEL E. MARKS

EXHIBIT "A"

DESCRIPTION FOR
MOSCA SECA
WELL LOT ACCESS AND OPERATION EASEMENT

JANUARY 8, 2008

AN EASEMENT LOCATED IN THE NW 1/ 4 OF SECTION 11, TOWNSHIP 4 NORTH, RANGE 1 WEST, BOISE MERIDIAN, CITY OF EAGLE, ADA COUNTY, IDAHO, BEING MORE PARTICULARLY DESCRIBED AS FOLLOWS:

COMMENCING AT THE NORTHEAST CORNER OF SECTION 11; T. 4N, R. 1W, B.M., THENCE S 81°41'03" W 3199.43 FEET TO THE **BEGINNING POINT** OF THIS CENTERLINE DESCRIPTION;

EASEMENT BEING 50 FEET IN WIDTH, 25 FEET ON EACH SIDE OF FOLLOWING DESCRIBED CENTERLINE;

THENCE 429.78 FEET ALONG A CURVE TO THE LEFT, SAID CURVE HAVING A RADIUS OF 350.00 FEET, A DELTA ANGLE OF 70°21'22", A TANGENT OF 246.70 FEET AND A CHORD BEARING S 08°25'54" W 403.28 FEET TO A POINT OF REVERSED CURVATURE;

THENCE 194.20 FEET ALONG A CURVE TO THE RIGHT, SAID CURVE HAVING A RADIUS OF 300.00 FEET, A DELTA ANGLE OF 37°05'19", A TANGENT OF 100.64 FEET AND A CHORD BEARING S 08°12'08" W 190.82 FEET TO OF TANGENCY;

THENCE S 10°20'32" W, 135.17 FEET TO A POINT;

EASEMENT TRANSITION TO 30 FEET IN WIDTH, 15 FEET ON EACH SIDE OF FOLLOWING DESCRIBED CENTERLINE;

THENCE N 90°00'00" W, 75.64 FEET TO A POINT;

EASEMENT TRANSITION TO 100 FEET IN WIDTH, 58.5 FEET ON THE RIGHT (NORTH) SIDE AND 41.5 FEET ON THE LEFT (SOUTH) SIDE OF FOLLOWING DESCRIBED CENTERLINE;

THENCE N 90°00'00" W, 100.00 FEET TO THE **ENDING POINT** OF THIS CENTERLINE DESCRIPTION.

PROFESSIONAL LAND SURVEYOR
REGISTERED
4998
1/8/08
STATE OF IDAHO
MICHAEL E. MARKS

Q:\18999\05-Srv\01-Doc\18999-WELL-ACCESS-EASE.doc

EXHIBIT "B"

CURVE TABLE						
CURVE	LENGTH	RADIUS	DELTA	TANGENT	CHORD BEARING	CHORD
C-1	429.78'	350.00'	70°21'22"	246.70'	S 08°25'54" W	403.28'
C-2	194.20'	300.00'	37°05'19"	100.64'	S 08°12'08" E	190.82'

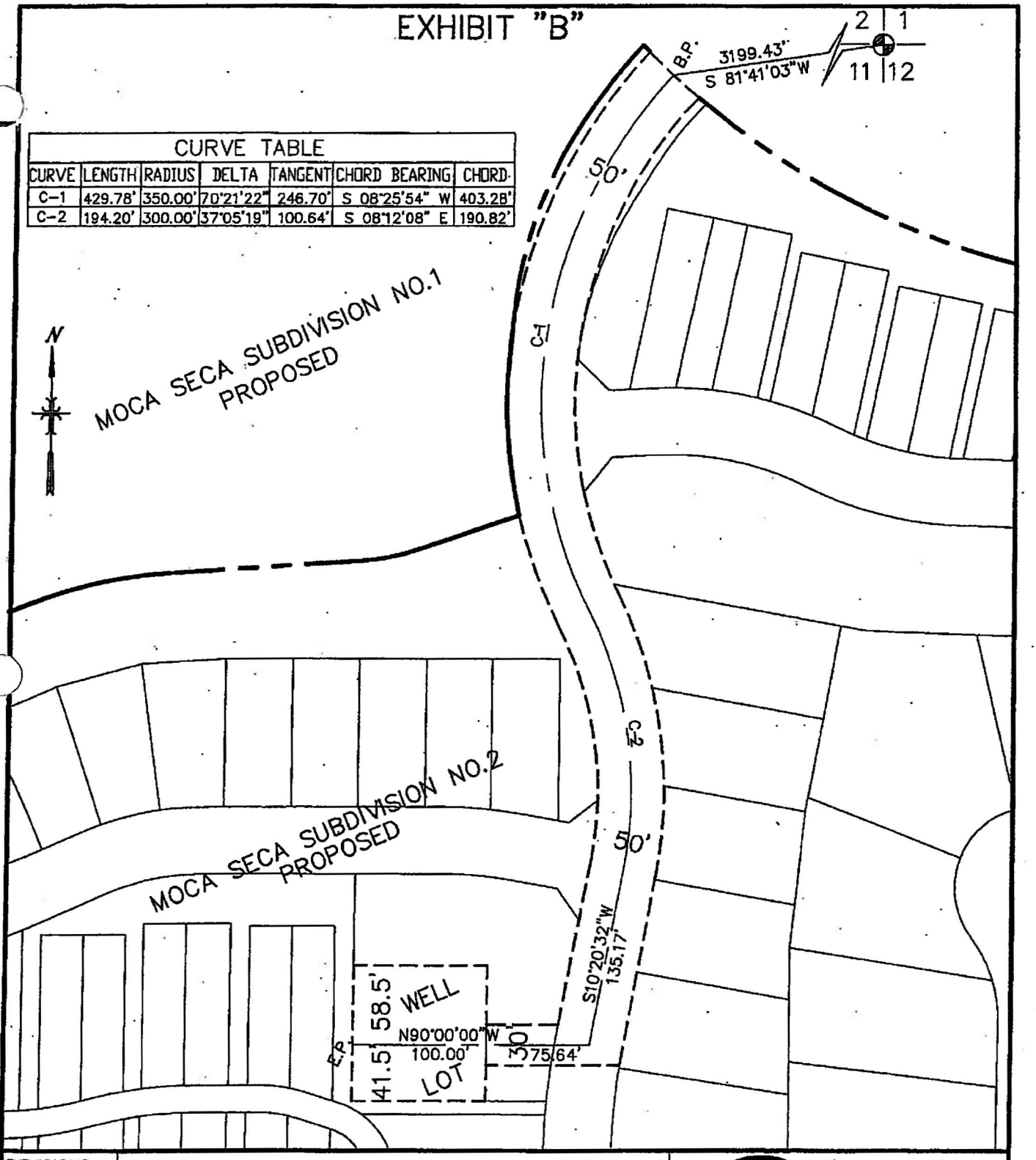

REVISIONS

CITY OF EAGLE MUNICIPAL WATER SYSTEM

ACCESS AND OPERATION EASEMENT
MOSCA SECA SUBDIVISION
SECTION 11, T.4 N., R.1 W., B.M.
EAGLE, ADA COUNTY, IDAHO

Stanley Consultants INC.
2264 S. BONITO WAY
SUITE 150
MERIDIAN, IDAHO 83642
208-855-5600

DRAWN: MEM	DATE: 1/08/08	SCALE: 1" =100'	JOB NO. 18999

APPENDIX B

Task Order

No. 1

Date of Issuance: December 11, 2007 Effective Date: December 11, 2007

Task Order:	Owner:	Owner's Contract No.:
Start-up and Operation of City of Eagle Water System – Western Area	City of Eagle, a municipal corporation	
Contract: :		**Date of Contract:**
City Engineer Professional Service Agreement		May 28, 1997
Engineer:		**Engineer's Project No.:**
Holladay Engineering Co.		EG 120407

The Contract Documents are modified as follows upon execution of this Task Order:

Description: City of Eagle Water System Operation and Maintenance Services

The City Engineer shall provide all administration, labor and material necessary to accomplish the attached scope of services which is incorporated and becomes part of this task order.

Attachments: (List documents supporting change):

Water System Operation & Maintenance Scope of Work – Phase I and Phase II, Clearwater Operations, Inc. system development and operation task list

TASK ORDER CONTRACT PRICE:

Facility System Initiation Fee: A $4,500 fee for the evaluation of the Facilities and the initiation of operation services. This includes development of a work plan to gain regulatory system approval and development of a control system for the wells and remote unit at City Hall. Direct cost of the control system shall be billed as direct cost.

Base Facility System Operation Fee: A monthly fee based on actual meters installed in the system in accordance with the following table.

Meters	Work Schedule	Cost
1 – 20	System Operation – (See Phase II scope of services)	$ 5,100/mo
21 – 50	System Operation – (See Phase II scope of services)	$ 7,500/mo
51 – 200	System Operation – (See Phase II scope of services)	$ 9,500/mo
>200 Units	Negotiate additional scope of services based on actual cost of operational and management duties	

Annual Adjustment. These costs are subject to a 3% increase annual adjustment on each anniversary of this Agreement unless otherwise agreed by the parties in writing.

Direct Costs. Payment for Holladay's Direct Costs associated with services due to any Subcontract, Emergency or Additional Services, plus a 6% service fee. As used herein, the term "Direct Costs" means the actual cost incurred by Holladay to provide services, supplies, or equipment relevant to the Subcontract, Emergency or Additional Services, including without limitation expenditures for project management and labor, employee benefits, chemicals, lab supplies, repairs, repair parts, maintenance parts, safety supplies, gasoline, oil, equipment rental, legal and professional services, quality assurance, travel, office supplies, other supplies, uniforms, telephone, postage, utilities, tools, memberships, and training supplies.

TASK ORDER CONTRACT PERIOD:

The initial term of this task order shall be one (1) year commencing on the effective date. Thereafter, this task order shall be automatically renewed for successive one (1) year terms unless canceled in writing by either party no less than 60 days prior to expiration of the applicable term.

ACCEPTED:

By: _____
Holladay Engineering Co. (Authorized Signature)

Date: Dec. 11, 2007

ACCEPTED:

By: _____
City of Eagle (Authorized Signature)

Date: Dec 11, 2007

RECEIVED & FILED
CITY OF EAGLE
DEC 07 2007
File:
Note to:

CLEARWATER OPERATIONS, INC.
616 S. WASHINGTON AVENUE
EMMETT, IDAHO 83617
TELEPHONE: 208-365-5385
FAX: 208-365-5389

Clearwater Operations, Inc.
City of Eagle – Water Utility Startup/Operating Proposal

The startup of the Western Area City Water System has both short-term and longer-term demands. Our proposal has been divided into two distinct scopes of service. Phase I (attached services) is the administrative/manager side of water operations that could involve a full time person for a year to develop a water system utility in its entirety. However, the attached Phase I scope was built around the "walk before you run" approach. It focuses on essential regulatory and business elements to get the utility started. Some components such as development of Standard Operating Procedures for each well and the reservoir are vital to protect the City. Other components may be completed over a longer period of time for a start-up system. Identifying the operator in responsible charge is necessary to obtain DEQ system approval. This proposal is based on the equivalent of one week per month initially developing the system to meet standards for operation. As customers are added, that time commitment including customer response reporting also develops proportionally, but the cost of service per customer diminishes.

Phase II (attached services) occurs with the advent of water in the system. It is immediate, hands-on operation of the system that gets the water delivered to the public, brings usage records to the billing clerk, and meets the daily operating criteria for a Public Drinking Water system in the State of Idaho.

Step	Metered Units	Work Outline	Cost
1	0	Preliminary to Operation – Develop a document schedule and detailed work plan based on a site review to gather information for regulatory approval. Oversee control system installation at wells and City Hall. Respond to DEQ on operating criteria and operator in responsible charge.	$ 4,500
2	1 – 20	System Operation – (See Phase II scope of services)	$ 5,100/mo
3	20 – 50	System Operation –	$ 7,500/mo
4	50 – 200	System Operation –	$ 9,500/mo
5	> 200 Units	Negotiate additional scope of services based on actual cost of operational and management duties.	

Clearwater Operations anticipates setting up the Water Department administratively in Eagle will be completed within the first two months of operation and prior to beginning actual meter reading. The outline of critical tasks associated with a water department includes:

- System Documentation and Tracking Procedures,
- Emergency Response Plan,
- System Mapping,
- Water Quality Procedures for Sampling, Testing, Retesting, and
- Systems Records Management.

The longer-term development and documentation of this skeletal system will emerge over the next 12 months as more customers come on-line, routines for work based on economies of scale are developed, vendor and bidding relationships are established, and other infrastructure is added. As portions of Phase I services setting up the system are completed, the cost of operation may be reduced or shifted to management of the Phase II services and cost of service may be adjusted accordingly.

CLEARWATER OPERATIONS, INC.

616 S. WASHINGTON AVENUE
EMMETT, IDAHO 83617

TELEPHONE: 208-365-5385
FAX: 208-365-5389

Elements of the Phase I services have not been prepared by the City of Eagle in the past as the City has relied on United Water for these functions. However, many of the critical talks outlined above are independent of system size and may not be required once developed.

Clearwater Operations, Inc. is ready today to respond and operate Eagle's water system from the initial system of the Western Service Area to any combination of the present City (Brookwood-Lexington) water system and/or to the addition of Eagle Water Company within any 30-day time period.

CLEARWATER OPERATIONS, INC.

616 S. WASHINGTON AVENUE
EMMETT, IDAHO 83617

TELEPHONE: 208-365-5385
FAX: 208-365-5389

CITY OF EAGLE WATER SYSTEM
Phase I
PROPOSED SCOPE OF WORK

Phase I is the identification and initiation of administrative programs and documents for support of your well sites and water distribution system. These are the initial regulatory and operating documents essential for providing efficient and defensible strategies for ensuring infrastructure protection, quality water supplies, and emergency response actions. Phase I is an evolving plan that is estimated to take 2 to 3 years to substantially complete and will perpetually require modification. Prioritization of these activities will be based upon the City of Eagle's vision and discussion with regulatory agencies to ensure compliance.

System Establishment

1) Physical review of reservoirs, wells, and pump station
   a) Site Security
   b) Site Inventory
   c) Emergency power
   d) Equipment capabilities
   e) Control schemes
   f) Computer and telemetry systems

Emergency Response Plan Development

1) Emergency action plans
   a) Power outages
   b) Line breaks
   c) Contamination
   d) Equipment failure (pumps, motors, automation, control mechanisms/programming, etc...)
2) Notifications for contaminants

System Mapping

1) Obtain and/or develop accurate map of entire system
   a) Wells
   b) Reservoirs
   c) Hydrants
   d) Dead-ends

CLEARWATER OPERATIONS, INC.
616 S. WASHINGTON AVENUE
EMMETT, IDAHO 83617
TELEPHONE: 208-365-5385
FAX: 208-365-5389

e) Valves
f) Piping
g) Meters
h) Pressure regulators
i) Air relief
j) Back flow preventers

2) Identify areas of concern
   a) Dead ends
   b) Stagnant laterals
   c) Cross connection
3) Keep it current

Water Quality

1) Regulatory Requirements
   a) Sample schedules
   b) Certified lab
   c) Waivers

Primary Documents

1) System.
   a) Systems start-ups
   b) Emergency procedures
2) Regulatory Documents
   a) Sample site plans
   b) Sampling S.O.P.'s
   c) Chain of Custody

3) Manufactures equipment manuals including;
   a) Schematics
   b) Repair parts list
   c) Operating instructions
   d) Maintenance guidelines

CLEARWATER OPERATIONS, INC.
616 S. WASHINGTON AVENUE
EMMETT, IDAHO 83617
TELEPHONE: 208-365-5385
FAX: 208-365-5389

e) Maintenance forms
f) Inventory
g) Preventative maintenance schedules

Administration

1) Equipment
   a) Trucks
   b) Tools
   c) disposables
2) Inventory
   a) Valves
   b) Meters
   c) Pumps
   d) Chemicals
   e) Spare parts
3) Ordering
4) Long term system improvements and expansion
5) Public Relations
6) Equipment specifications
7) Vendor contacts
8) Emergency contacts
9) P.M. scheduling
10) Record keeping
    a) Sampling
    b) P.M.'s
    c) Complaints
    d) Training
11) Budgeting
12) Billing
13) Reports to owner

Regulatory

CLEARWATER OPERATIONS, INC.

616 S. WASHINGTON AVENUE
EMMETT, IDAHO 83617

TELEPHONE: 208-365-5385
FAX: 208-365-5389

CITY OF EAGLE WATER SYSTEM
Phase II
PROPOSED SCOPE OF WORK

Phase II is the day to day, hands on operation of your water distribution system. These activities represent routine information collected and actions performed to maintain the system and appurtenances. Phase II complements the required documents and actions outlined in phase I and ensures the residents of the City of Eagle that they are supplied with a safe and adequate supply of potable water.

Operations

1) Facility inspection
2) System maintenance
3) Sampling
4) Meter sets
5) Shut-off/Turn-ons
6) Emergency response
7) Meter Reading

Operations Documents

1) Operations and Maintenance Plan
   a) Routine procedures
   b) Water usage
   c) Operating parameters controls
   d) Standard operating procedures
      i) Shut offs
      ii) Line locates
      iii) Emergency response
      iv) Hydrant flushing
      v) Well flushing
      vi) Valve exercising
      vii) Equipment inspection
      viii) All related duties

CLEARWATER OPERATIONS, INC.

616 S. WASHINGTON AVENUE
EMMETT, IDAHO 83617

TELEPHONE: 208-365-5385
FAX: 208-365-5389

2) Record keeping
   a) State approved plans
   b) Water quality monitoring records
   c) Annual reports
   d) Well capacities
   e) Waivers
3) Safety Manual
   a) Site security
   b) MSDS
   c) Lockout/tagout
   d) Traffic

CLEARWATER OPERATIONS, INC.

616 S. WASHINGTON AVENUE
EMMETT, IDAHO 83617

TELEPHONE: 208-365-5385
FAX: 208-365-5389

Emergency Contact List
Eagle Water System

Clearwater Operations, Inc.

Office	365-5385
Ron Gearhart	573-7606
Travis Capson	573-7627
Chris Kossow	941-3591
Brian Wright	919-5668

Holladay Engineering

Office	853-6281
Kasey Ketterling	941-0989
Vern Brewer	598-1605

City of Eagle

City Hall	938-6813
Michael Echeita	921-2076
Phil Bandy	938-1789

Emergency Services

Emergencies	911
Fire	939-6463
Ada County Sherriff - dispatch	377-6790
Ada County Sherriff – Admin	577-3306

Utilities

Dig Line	342-1583
Idaho Power	388-2323
Intermountain Gas	1-877-777-7442

03/31/08

CLEARWATER OPERATIONS, INC.

616 S. WASHINGTON AVENUE
EMMETT, IDAHO 83617

TELEPHONE: 208-365-5385
FAX: 208-365-5389

Clearwater Operations, Inc. Organizational

Ron Gearhart
Responsible Charge Operator
Office 365-5385
Cell 573-7606

↓

Travis Capson
Responsible Charge Back-up
Office 365-5385
Cell 573-7627

↓

Clint Seamons
Construction
Management
Office 365-
5385
Cell 941-6668

Brian Wright
Laboratory
Services
Office 365-5385
Cell 919-5668

Local O&M Team
Chris Kossow
Office 365-5385
Cell 941-3519

→

Responders:
Daniel Kern 922-5971
Michael Pope 587-5294
James Simpson 350-8844

Ron Gearhart	Travis Capson	Brian Wright	Chris Kossow	Mike Pope	Jim Simpson	Den Kern
DWD1-14947	DWD1-14914	WWL4-11831	WWD2-15717	DWD2-15283	DWD1 – 11516	DWD3- 12780
WWC4-14152	WWC4-14153	WWC3-15015	WWC2-14465	DWT1- 11300	DWT2 – 11517	
WWL4-15601	WWL1-15136	WWT3-11832	WWT1-12951	WWT1-11299	WWT3 - 11515	
WWT4-10603	WWT4-10300	CDL	CDL			
WWTLA –14737	WWTLA-14758					
DWTOIT-15602	DWTOIT-15599					

HOLLADAY ENGINEERING CO.
ENGINEERS • CONSULTANTS

32 N. Main • P.O. Box 235
Payette, ID 83661
(208) 642-3304 • Fax # (208) 642-2159

839 E. Winding Creek Dr., Suite 101
Eagle, ID 83616
(208) 853-6281 • Fax # (208) 853-2831

November 30, 2007

Mayor of Eagle &
Eagle City Council
P.O. Box 1520
Eagle, ID 83616

Re: Holladay Engineering Co./Clearwater Operations, Inc.

Ladies and Gentlemen:

As you know, Holladay Engineering Co. ("Holladay") is the city engineer for the City of Eagle. The City and Holladay are contemplating entering into an Agreement for Operations and Maintenance Services for the operation and maintenance of a portion of the City's water treatment system.

The draft Agreement for Operations and Maintenance Services provides that Holladay may engage subcontractors to complete services required under the agreement. I have had several discussions with certain representatives of the City in which I have indicated that Holladay is considering engaging Clearwater Operations, Inc. ("Clearwater") to perform services as a subcontractor pursuant to the terms of the Agreement for Operations and Maintenance Services. The purpose of this letter is to confirm in writing the disclosures I made previously regarding the business affiliation between Holladay and Clearwater.

I personally am a shareholder and director of both Holladay and Clearwater. In addition, each of the shareholders of Holladay are currently shareholders of Clearwater. Neither I, nor the shareholders or directors of either Holladay or Clearwater, perceive this subcontractor arrangement to create an impermissible or undesirable conflict of interest. However, this disclosure is being provided at the direction of the boards of directors of Holladay and Clearwater to ensure full disclosure concerning the relationships between these two entities.

I would be happy to provide any additional information about this that you believe is appropriate.

Sincerely,

Vernon E. Brewer, President
Holladay Engineering Co.

C.C. Susan Buxton

HOLLADAY ENGINEERING COMPANY

SUBCONTRACT AGREEMENT

THIS SUBCONTRACT AGREEMENT ("Subcontract") is made effective as of November 29, 2007, between **HOLLADAY ENGINEERING COMPANY, AN IDAHO CORPORATION** ("Contractor") and the party identified as "Subcontractor" in the signature block at the end of this Subcontract.

RECITALS

1. Contractor has contracted with the City of Eagle, Idaho (the "City"), to operate and maintain the city water system.

2. Subcontractor desires to furnish, and Contractor desires to have Subcontractor furnish, certain labor, materials, and expertise for Contractor. Contractor and Subcontractor desire to establish the terms and conditions that govern the relationship between them when Subcontractor furnishes such labor, materials, and expertise pursuant to this Subcontract.

3. Upon the issuance of a notice to proceed (the "Notice to Proceed") by Contractor, and acceptance or performing any work under such Notice to Proceed by Subcontractor, the terms and conditions of this Subcontract and the Notice to Proceed issued by Contractor shall govern the relationship between Contractor and Subcontractor with respect to any work performed by Subcontractor pursuant to that Notice to Proceed. Terms used in this Subcontract and the Notice to Proceed shall have the meanings assigned to them in this Subcontract and/or in the Notice to Proceed.

AGREEMENT

1. **SCOPE.** Subcontractor agrees to furnish all labor, materials, and expertise required to complete the work described in the Notice to Proceed issued pursuant to this Subcontract in relation to the operation and maintenance of the City's water system (hereinafter, the "Work") in compliance with all subcontract documents, as those documents are identified in the Notice to Proceed. The Work shall include all labor, materials, facilities, supervision and services that are:

(a) reasonably inferable from the Work specified;

(b) customarily performed and provided by competent contractors as part of the proper performance of the work of the type specified;

(c) necessary to perform the Work in compliance with the Safety Rules and Regulations and the Laws and Regulations, as those terms are defined below; and

(d) necessary to fulfill the undertakings, covenants, guarantees, representations and warranties set forth in this Subcontract and the Subcontract Documents.

2. **SUBCONTRACT PRICE.** Contractor shall pay Subcontractor as provided in the Notice to Proceed. The Subcontract Price, as defined in the Notice to Proceed, shall include all costs and expenses to perform the Work, and associated with the performance of the Work.

3. **INDEPENDENT CONTRACTOR RELATIONSHIP.** The relationship of Subcontractor to Contractor during the term of this Subcontract shall be that of an independent contractor. Subcontractor shall take any and all actions necessary to maintain that independent contractor relationship throughout the term of the Subcontract, and neither Subcontractor nor its employees shall be considered employees of Contractor. Subcontractor shall exercise exclusive control for the means, methods, techniques, and procedures in performance of the Work.

4. **PERMITS AND LICENSES.** Subcontractor shall promptly obtain, at its expense, and before commencing any portion of the Work, any and all permits and licenses

required for the Work. Subcontractor shall provide Contractor with a copy of each required permit or license upon request.

5. **OPERATOR IN RESPONSIBLE CHARGE.** Subcontractor hereby designates the following individual as the designated operator in responsible charge as required by the Idaho Department of Environmental Quality: Ron Gearhart, Vice President of Operations. Subcontractor shall take all steps necessary to complete any registration or approvals required by the Idaho Department of Environmental Quality in connection with such designation.

6. **EMERGENCY RESPONSE.** In the event of any emergency involving the City water supply, Subcontractor shall respond immediately, but in no case later than 1 (one) hours following notice of such emergency, and take all steps reasonably necessary to alleviate the emergency and restore the City water supply to its normal state in compliance with all Laws and Regulations.

7. **DISCREPANCIES IN WORK REQUIREMENTS.** In the event of any discrepancy (1) in the Subcontract Documents, or (2) between the Subcontract Documents and the Laws and Regulations pertaining in any way to the Work, those which are more stringent, provide persons and property with greater protection shall govern. Subcontractor shall promptly notify Contractor in writing of any such discrepancy. Contractor assumes no responsibility to Subcontractor for failure of the Subcontract Documents to be consistent with the Laws and Regulations. If any governmental authority requires a change in the Work based on any Laws and Regulations, Subcontractor shall make such change without an adjustment in the Subcontract Price.

8. **DATA FURNISHED BY SUBCONTRACTOR.** When requested by Contractor, Subcontractor shall, at its own expense, promptly furnish any reasonable number of schedules, reports, or any other data that may be necessary in the opinion of Contractor for proper performance, reporting obligations, or clarification of the Work.

9. **COOPERATION BY SUBCONTRACTOR.** Subcontractor shall (1) show City's representatives proper courtesy and cooperation when they are on the Project site, (2) attend all meetings called by Contractor concerning the Project upon at least twenty-four (24) hours' notice, whether written or verbal, (3) protect the work of others from damage as a result of its performance of the Work, and (4) cooperate with Contractor in scheduling.

10. **PROSECUTION OF THE WORK.** During the performance of the Work, Subcontractor shall furnish sufficient skilled labor, materials, tools and equipment to prosecute the Work in compliance with the Project Schedule. Subcontractor shall diligently prosecute the Work in accordance with the Project Schedule.

11. **SAFETY.** Subcontractor shall initiate, maintain and supervise all safety precautions and programs in connection with the Work including, without limitation, such precautions and programs as necessary to comply with any City regulations (collectively, the "Safety Rules and Regulations"). Subcontractor shall promptly report to Contractor all accidents incidental to the Work which result in death or injury to persons or in damage to property. Subcontractor shall provide to Contractor any reasonable documentation requested by Contractor related to any such injury or damage.

12. **COMPLIANCE WITH LAWS AND REGULATIONS.** Subcontractor shall comply with all state, local, and City laws, regulations, codes, ordinances, and orders that directly or indirectly bear on the Work and/or the performance of the Work including, without limitation:

(a) worker's compensation laws and regulations;

(b) safety laws, codes, regulations and orders, including, without limitation, the Occupational Safety & Health Act of 1970, as enacted and amended, and regulations issued under that act;

(c) wage, hour, labor, and anti-discrimination laws, and

(d) tax laws and regulations; all as enacted and amended, and all regulations issued under such acts

Collectively, these are referred to in this Subcontract as the "Laws and Regulations."

13. **CHANGES AND MODIFICATIONS TO SUBCONTRACT.** Without invalidating the Subcontract and without notice to any surety, Contractor may, at any time or from time to time, order additions, deletions or revisions in the Work or acceleration of the Work. Any such additions, deletions, revisions, or acceleration shall be binding upon Contractor and Subcontractor when made in writing executed by a duly authorized representative of Contractor. Upon receipt of such an order, Subcontractor shall promptly proceed with the Work involved which shall be performed under the applicable conditions of this Subcontract and the Subcontract Documents, except as otherwise specifically provided. Subcontractor shall not proceed to perform changes in the Work without prior written authorization from Contractor.

14. **LIMITATION OF WARRANTIES.** Except as expressly stated in this Agreement, Subcontractor makes no representations or warranties—express or implied—regarding the Work, including, but not limited to any implied warranty of merchantability, fitness for a particular purpose, or that the Work will be uninterrupted or error-free, and all such warranties are hereby disclaimed by Subcontractor to the extend permitted by applicable laws and regulations.

15. **WITHHOLDING.** Contractor may withhold payment to Subcontractor in whole or in part to the extent necessary, in Contractor's sole discretion, to protect Contractor against losses for which Subcontractor is responsible as a result of any Default, as that term is defined below.

16. **DEFAULT.** The following acts or omissions by Subcontractor shall constitute events of default ("Default") under this Subcontract and shall give rise to all rights and remedies for material breach of this Subcontract, including, without limitation, termination of this Subcontract:

(a) failure to perform the Work in strict compliance with this Subcontract and the Subcontract Documents;

(b) failure to diligently perform the Work in compliance with the Project Schedule including, without limitation, failure to supply sufficient skilled laborers, materials or equipment;

(c) failure to provide timely submittal information for review and approval as provided in the Subcontract Documents;

(d) assignment or subcontracting any of portion of the Work without prior written authorization from Contractor;

(e) failure to perform the Work in strict compliance with the Laws and Regulations or the Safety Rules and Regulations;

(f) insolvency, inability to pay its current obligations, filing of any action seeking the protection of a bankruptcy court where this Subcontract is rejected by the trustee or the Subcontractor is unable to satisfy the requirements for assuming this Subcontract under the applicable provisions of the bankruptcy code, seeking to effect reorganization or workout with its creditors, filing in bankruptcy court by its creditors seeking to compel Subcontractor to reorganize or liquidate assets, appointment of a receiver or trustee related to any insolvency of Subcontractor, and garnishment of any amounts owed by Contractor to Subcontractor;

(g) any other violation of this Subcontract or the Subcontract Documents; and

(h) any act, occurrence or event that places Subcontractor in default under

any agreement between Contractor and Subcontractor other than this Subcontract.

Upon written notice of Default, Subcontractor shall, within forty-eight (48) hours of receipt of such notice, take all actions requested by Contractor and such other actions as may be necessary to cure such Default.

If Subcontractor fails to cure any Default within forty-eight (48) hours after receipt of written notice of Default, Contractor may cure or remedy any Default by Subcontractor. Subcontractor shall reimburse Contractor and/or Contractor may backcharge Subcontractor for, any and all losses it incurs, plus a reasonable allowance for profit, to cure or remedy any Default, or as a result of any other failure of Subcontractor to comply with the terms and conditions of this Subcontract or the Subcontract Documents. Contractor may offset any losses incurred as a result of a Default or any amounts owed to Contractor pursuant to this Section.

Subcontractor shall pay Contractor interest at a rate of one and one-half percent (1½%) per month compounded monthly on all losses that Contractor incurs and for which Subcontractor required to reimburse Contractor under this Subcontract. In the event that any applicable state or federal law prohibits recovery of interest at the rate set forth in this Section, Subcontractor shall pay Contractor interest as provided herein at the highest rate allowed by law.

17. **TERMINATION FOR CAUSE.** If (1) Subcontractor fails to cure any Default within forty-eight (48) hours after receipt of written notification of such Default, or (2) a Default threatens to cause immediate personal or bodily injury or death, Contractor may terminate Subcontractor's rights under this Subcontract in its entirety, or to the extent of a specific Notice to Proceed, and Contractor shall have all the rights and remedies available under this Subcontract and at law or in equity including, without limitation, those remedies specified below.

Upon termination for cause as provided herein, Subcontractor shall not be entitled to receive any further payment until completion of all of the Work and acceptance of the entire Project. Subcontractor shall reimburse Contractor for all losses it incurs to complete Subcontractor's Work, plus a reasonable allowance for overhead and profit. If the unpaid balance of the Subcontract Price exceeds the Contractor's losses, plus allowance for overhead and profit, Contractor shall pay such excess to Subcontractor. If such losses, overhead, and profit exceed the unpaid balance of the Subcontract Price, the Subcontractor shall pay the difference to Contractor. In addition, Contractor shall be entitled to such other and further remedies available at law or in equity.

18. **TERMINATION FOR CONVENIENCE BY CONTRACTOR.** The Contractor may, at any time, terminate this Subcontract for the convenience of Contractor and without cause. Subcontractor's sole and exclusive right to compensation for losses resulting from such termination shall be the compensation actually received by Contractor from City on behalf of Subcontractor as a result of any such termination. Subcontractor shall not be entitled to any compensation for losses or any other remedy under this Subcontract or for breach thereof as a result of such termination beyond such adjustment in the contract price and/or the contract price to the Prime Contract received by Contractor from City on behalf of Subcontractor. Receipt by Contractor of such compensation is a condition precedent to Subcontractor's right, if any, to compensation for losses resulting from such termination. Subcontractor's right to recover for such termination shall be limited to the compensation received by Contractor from City for such termination on behalf of Subcontractor.

19. **ADDITIONAL TRAINING UPON TERMINATION.** Upon termination for any reason, Subcontractor shall, upon request of Contractor, provide up to 30 days of onsite orientation for City personnel. Subcontractor shall be paid an hourly fee mutually agreeable to the parties and all expenses incurred by

Subcontractor in connection with such orientation training.

20. **INSURANCE.** Subcontractor shall obtain and maintain insurance coverage of the type and amount described on **Schedule 1** of this Subcontract. Except as agreed in writing by Contractor, each insurance policy shall name both City and Contractor as additional insured.

21. **INDEMNIFICATION.** Subject to any limitations of liability or warranties set forth in this Subcontract, Subcontractor shall indemnify and hold Contractor and City harmless from any liability or damages for property damage or bodily injury, including death, which may arise from Subcontractor's negligence arising from the performance of its obligations under this Agreement.

22. **ASSIGNMENT.** Subcontractor shall neither assign nor subcontract the whole or any portion of this Subcontract or the payments hereunder without obtaining, in each and every instance, prior written approval from Contractor. Any assignment or subcontract by Subcontractor made without the consent of Contractor as herein provided shall be null and void. Contractor may assign its rights to this Subcontract to the extent it applies to the Work and/or a Notice to Proceed as required by the Subcontract Documents.

23. **NON-WAIVER OF DEFAULTS.** Delay by Contractor in enforcing any rights or remedies in the event of Default or a breach of any term or condition of this Subcontract or any other contract between Contractor or Subcontractor, shall not be construed as a waiver of such Default or breach. Payment by Contractor of progress payments or final payment shall not be construed as acceptance of any work for which payment is made or waiver of any Claims, rights or remedies under this Subcontract. Any consent by Contractor to any delay in the performance by Subcontractor of any obligations to be performed by Subcontractor shall be applicable only to the particular Work to which it relates, and shall not be applicable to any other obligation or Work. Contractor shall waive Default or breach of any of a term or condition of this Subcontract only as expressly agreed upon in writing executed by Contractor. Any such waiver shall not be construed as a waiver of any subsequent Default or breach.

24. **ENTIRE AGREEMENT.** The Subcontract Documents constitute the final, complete and exclusive statement of the terms and conditions of the agreement between Contractor and Subcontractor and supercede all prior agreements, negotiations, and discussions between the parties hereto and/or their respective counsel with respect to the subject matter covered hereby.

25. **CONSTRUCTION OF AGREEMENT/CONFLICT OF LAWS.** This Subcontract shall be construed and interpreted as a whole in accordance with its fair meaning and in accordance with the laws of the state of the location of the Project. Under no circumstances, however, shall such laws be interpreted to apply conflict of laws principles to require the laws of another state to determine the interpretation or construction of this Subcontract.

The headings used herein are for reference only and shall not affect the construction of this Agreement.

26. **SEVERABILITY.** Should any of the provisions of this Subcontract prove to be invalid or otherwise ineffective, the other provisions of this Subcontract shall remain in full force and effect. There shall be substituted for any such invalid or ineffective provision a provision which, as far as legally possible, most nearly reflects the intention of the parties hereto.

27. **NOTICES.** Any notices or statements required or designed to be given under this Subcontract, unless otherwise provided herein, shall be personally served or sent by United States mail, email, facsimile, or other reputable courier service. Notices not personally served or sent by email or facsimile shall be deemed to have been delivered one (1) day after deposit in the United States mail, properly addressed and with postage prepaid.

IN WITNESS WHEREOF, the parties have executed and delivered this Subcontract on the date first set forth above.

CONTRACTOR:

HOLLADAY ENGINEERING COMPANY

By: _____
Print Name: Vernon E. Brewer
Its: President
Date: Nov. 29, 2007

SUBCONTRACTOR:

CLEARWATER OPERATIONS, INC.

By: _____
Print Name: John Blom
Its: President
Date: 11/29/07

Schedule 1 Insurance Certificates for City of Eagle and Holladay Engineering Co.

ACORD. CERTIFICATE OF LIABILITY INSURANCE

OP ID DC CLEAR-3

DATE (MM/DD/YYYY) 11/29/07

PRODUCER

The Hartwell Corporation - Cal
PO Box 400
Caldwell ID 83606
Phone:208-459-1678 Fax:208-454-1114

THIS CERTIFICATE IS ISSUED AS A MATTER OF INFORMATION ONLY AND CONFERS NO RIGHTS UPON THE CERTIFICATE HOLDER. THIS CERTIFICATE DOES NOT AMEND, EXTEND OR ALTER THE COVERAGE AFFORDED BY THE POLICIES BELOW.

INSURED

Clearwater Operations, Inc.
616 So. Washington Ave.
Emmett ID 83617

INSURERS AFFORDING COVERAGE		NAIC #
INSURER A:	Hudson Specialty Insurance Co	
INSURER B:	Ohio Casualty Ins Co	
INSURER C:	Idaho State Insurance Fund	
INSURER D:		
INSURER E:		

COVERAGES

THE POLICIES OF INSURANCE LISTED BELOW HAVE BEEN ISSUED TO THE INSURED NAMED ABOVE FOR THE POLICY PERIOD INDICATED. NOTWITHSTANDING ANY REQUIREMENT, TERM OR CONDITION OF ANY CONTRACT OR OTHER DOCUMENT WITH RESPECT TO WHICH THIS CERTIFICATE MAY BE ISSUED OR MAY PERTAIN, THE INSURANCE AFFORDED BY THE POLICIES DESCRIBED HEREIN IS SUBJECT TO ALL THE TERMS, EXCLUSIONS AND CONDITIONS OF SUCH POLICIES. AGGREGATE LIMITS SHOWN MAY HAVE BEEN REDUCED BY PAID CLAIMS.

INSR LTR	ADD'L INSRD	TYPE OF INSURANCE	POLICY NUMBER	POLICY EFFECTIVE DATE (MM/DD/YY)	POLICY EXPIRATION DATE (MM/DD/YY)	LIMITS	
A		GENERAL LIABILITY X COMMERCIAL GENERAL LIABILITY CLAIMS MADE X OCCUR X Pollution GEN'L AGGREGATE LIMIT APPLIES PER: POLICY PRO-JECT LOC	FEC6113916	07/20/07	07/20/08	EACH OCCURRENCE DAMAGE TO RENTED PREMISES (Ea occurence) MED EXP (Any one person) PERSONAL & ADV INJURY GENERAL AGGREGATE PRODUCTS - COMP/OP AGG	$ 1000000 $ 50000 $ 5000 $ 1000000 $ 2000000 $ 2000000
B		AUTOMOBILE LIABILITY X ANY AUTO ALL OWNED AUTOS SCHEDULED AUTOS HIRED AUTOS NON-OWNED AUTOS	53516682	07/20/07	07/20/08	COMBINED SINGLE LIMIT (Ea accident) BODILY INJURY (Per person) BODILY INJURY (Per accident) PROPERTY DAMAGE (Per accident)	$ 1000000 $ $ $
		GARAGE LIABILITY ANY AUTO				AUTO ONLY - EA ACCIDENT OTHER THAN AUTO ONLY: EA ACC AGG	$ $ $
		EXCESS/UMBRELLA LIABILITY OCCUR CLAIMS MADE DEDUCTIBLE RETENTION $				EACH OCCURRENCE AGGREGATE	$ $ $ $ $
C		WORKERS COMPENSATION AND EMPLOYERS' LIABILITY ANY PROPRIETOR/PARTNER/EXECUTIVE OFFICER/MEMBER EXCLUDED? If yes, describe under SPECIAL PROVISIONS below	609899	07/01/07	07/01/08	X WC STATUTORY LIMITS OTHER E.L. EACH ACCIDENT E.L. DISEASE - EA EMPLOYEE E.L. DISEASE - POLICY LIMIT	$ 100000 $ 100000 $ 500000
A		OTHER Prof. Liability $2,500 deductible	FEC6113916	07/20/07	07/20/08	Ea. Claim Annl Aggr	$1,000,000 $2,000,000

DESCRIPTION OF OPERATIONS / LOCATIONS / VEHICLES / EXCLUSIONS ADDED BY ENDORSEMENT / SPECIAL PROVISIONS

*10 Days Notice of Cancellation applies for nonpayment of premium.

CERTIFICATE HOLDER

CITYE-1

City of Eagle
P.O. Box 1520
Eagle ID 83616

CANCELLATION

SHOULD ANY OF THE ABOVE DESCRIBED POLICIES BE CANCELLED BEFORE THE EXPIRATION DATE THEREOF, THE ISSUING INSURER WILL ENDEAVOR TO MAIL *30 DAYS WRITTEN NOTICE TO THE CERTIFICATE HOLDER NAMED TO THE LEFT, BUT FAILURE TO DO SO SHALL IMPOSE NO OBLIGATION OR LIABILITY OF ANY KIND UPON THE INSURER, ITS AGENTS OR REPRESENTATIVES.

AUTHORIZED REPRESENTATIVE

© ACORD CORPORATION 1988

IMPORTANT

If the certificate holder is an ADDITIONAL INSURED, the policy(ies) must be endorsed. A statement on this certificate does not confer rights to the certificate holder in lieu of such endorsement(s).

If SUBROGATION IS WAIVED, subject to the terms and conditions of the policy, certain policies may require an endorsement. A statement on this certificate does not confer rights to the certificate holder in lieu of such endorsement(s).

DISCLAIMER

The Certificate of Insurance on the reverse side of this form does not constitute a contract between the issuing insurer(s), authorized representative or producer, and the certificate holder, nor does it affirmatively or negatively amend, extend or alter the coverage afforded by the policies listed thereon.

ACORD CERTIFICATE OF LIABILITY INSURANCE

OP ID DO CLEAR-3

DATE (MM/DD/YYYY) 11/29/07

PRODUCER

The Hartwell Corporation - Cal
PO Box 400
Caldwell ID 83606
Phone:208-459-1678 Fax:208-454-1114

THIS CERTIFICATE IS ISSUED AS A MATTER OF INFORMATION ONLY AND CONFERS NO RIGHTS UPON THE CERTIFICATE HOLDER. THIS CERTIFICATE DOES NOT AMEND, EXTEND OR ALTER THE COVERAGE AFFORDED BY THE POLICIES BELOW.

INSURED

Clearwater Operations, Inc.
616 So. Washington Ave.
Emmett ID 83617

INSURERS AFFORDING COVERAGE		NAIC #
INSURER A:	Hudson Specialty Insurance Co	
INSURER B:	Ohio Casualty Ins Co	
INSURER C:	Idaho State Insurance Fund	
INSURER D:		
INSURER E:		

COVERAGES

THE POLICIES OF INSURANCE LISTED BELOW HAVE BEEN ISSUED TO THE INSURED NAMED ABOVE FOR THE POLICY PERIOD INDICATED. NOTWITHSTANDING ANY REQUIREMENT, TERM OR CONDITION OF ANY CONTRACT OR OTHER DOCUMENT WITH RESPECT TO WHICH THIS CERTIFICATE MAY BE ISSUED OR MAY PERTAIN, THE INSURANCE AFFORDED BY THE POLICIES DESCRIBED HEREIN IS SUBJECT TO ALL THE TERMS, EXCLUSIONS AND CONDITIONS OF SUCH POLICIES. AGGREGATE LIMITS SHOWN MAY HAVE BEEN REDUCED BY PAID CLAIMS.

INSR LTR	ADD'L INSRD	TYPE OF INSURANCE	POLICY NUMBER	POLICY EFFECTIVE DATE (MM/DD/YY)	POLICY EXPIRATION DATE (MM/DD/YY)	LIMITS	
A		GENERAL LIABILITY X COMMERCIAL GENERAL LIABILITY CLAIMS MADE X OCCUR X Pollution GEN'L AGGREGATE LIMIT APPLIES PER: POLICY PRO-JECT LOC	FEC6113916	07/20/07	07/20/08	EACH OCCURRENCE DAMAGE TO RENTED PREMISES (Ea occurence) MED EXP (Any one person) PERSONAL & ADV INJURY GENERAL AGGREGATE PRODUCTS - COMP/OP AGG	$ 1000000 $ 50000 $ 5000 $ 1000000 $ 2000000 $ 2000000
B		AUTOMOBILE LIABILITY X ANY AUTO ALL OWNED AUTOS SCHEDULED AUTOS HIRED AUTOS NON-OWNED AUTOS	53516682	07/20/07	07/20/08	COMBINED SINGLE LIMIT (Ea accident) BODILY INJURY (Per person) BODILY INJURY (Per accident) PROPERTY DAMAGE (Per accident)	$ 1000000 $ $ $
		GARAGE LIABILITY ANY AUTO				AUTO ONLY - EA ACCIDENT OTHER THAN AUTO ONLY: EA ACC AGG	$ $ $
		EXCESS/UMBRELLA LIABILITY OCCUR CLAIMS MADE DEDUCTIBLE RETENTION $				EACH OCCURRENCE AGGREGATE	$ $ $ $ $
C		WORKERS COMPENSATION AND EMPLOYERS' LIABILITY ANY PROPRIETOR/PARTNER/EXECUTIVE OFFICER/MEMBER EXCLUDED? If yes, describe under SPECIAL PROVISIONS below	609899	07/01/07	07/01/08	X WC STATU-TORY LIMITS OTH-ER E.L. EACH ACCIDENT E.L. DISEASE - EA EMPLOYEE E.L. DISEASE - POLICY LIMIT	$ 100000 $ 100000 $ 500000
A		OTHER Prof. Liability $2,500 deductible	FEC6113916	07/20/07	07/20/08	Ea. Claim Annl Aggr	$1,000,000 $2,000,000

DESCRIPTION OF OPERATIONS / LOCATIONS / VEHICLES / EXCLUSIONS ADDED BY ENDORSEMENT / SPECIAL PROVISIONS

*10 Days Notice of Cancellation applies for nonpayment of premium.

CERTIFICATE HOLDER

HOLLA-1

Holladay Engineering Co.
839 E. Winding Creek Dr.,Ste1
Eagle ID 83616

CANCELLATION

SHOULD ANY OF THE ABOVE DESCRIBED POLICIES BE CANCELLED BEFORE THE EXPIRATION DATE THEREOF, THE ISSUING INSURER WILL ENDEAVOR TO MAIL *30 DAYS WRITTEN NOTICE TO THE CERTIFICATE HOLDER NAMED TO THE LEFT, BUT FAILURE TO DO SO SHALL IMPOSE NO OBLIGATION OR LIABILITY OF ANY KIND UPON THE INSURER, ITS AGENTS OR REPRESENTATIVES.

AUTHORIZED REPRESENTATIVE

© ACORD CORPORATION 1988

IMPORTANT

If the certificate holder is an ADDITIONAL INSURED, the policy(ies) must be endorsed. A statement on this certificate does not confer rights to the certificate holder in lieu of such endorsement(s).

If SUBROGATION IS WAIVED, subject to the terms and conditions of the policy, certain policies may require an endorsement. A statement on this certificate does not confer rights to the certificate holder in lieu of such endorsement(s).

DISCLAIMER

The Certificate of Insurance on the reverse side of this form does not constitute a contract between the issuing insurer(s), authorized representative or producer, and the certificate holder, nor does it affirmatively or negatively amend, extend or alter the coverage afforded by the policies listed thereon.

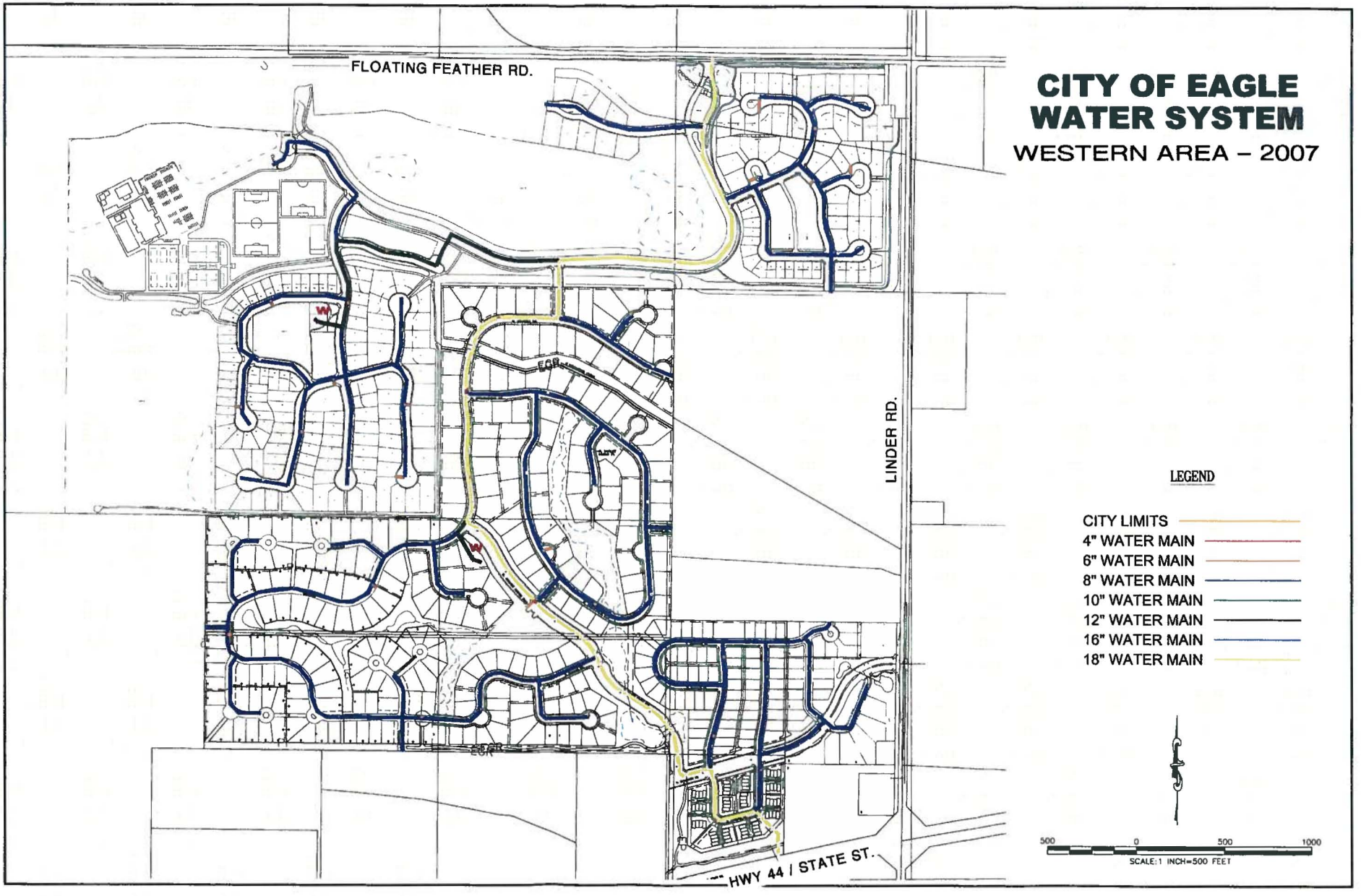
CITY OF EAGLE
WATER SYSTEM
WESTERN AREA – 2007
FLOATING FEATHER RD.
LINDER RD.
HWY 44 / STATE ST.
LEGEND
CITY LIMITS
4" WATER MAIN
6" WATER MAIN
8" WATER MAIN
10" WATER MAIN
12" WATER MAIN
16" WATER MAIN
18" WATER MAIN
500
0
500
1000
SCALE: 1 INCH=500 FEET

Mosca Seca Phase 1/Eaglefield Phase 1 Water System Parts

Mosca Seca/Eaglefield Water Sytem Parts List

Item Description	Mosca Seca QTY	Eaglefield QTY	Totals	Maint. Required Date (Operator)	Replacement Date
Water Valves					
6" WAT GATE VALVE	11 EA		11 EA		January 1, 2027
6" MUELLER GATE VALVE		14 EA	14 EA		January 1, 2027
8" WATEROUS GATE VAL	17 EA		17 EA		January 1, 2027
8" MUELLER GATE VAL		23 EA	23 EA		January 1, 2027
10" WATEROUS GATE VAL					
10" MUELLER GATE VAL					
12" WATEROUS GATE VAL	6 EA		6 EA		January 1, 2027
12" MUELLER GATE VAL		8 EA	8 EA		January 1, 2027
16" WATEROUS GATE VAL	7 EA		7 EA		January 1, 2027
16" MUELLER GATE VAL		25 EA	25 EA		January 1, 2027
18" WATEROUS GATE VALVE					
Fire Hydrants					
WATEROUS HYDRANT	11 EA		11 EA		January 1, 2027
MUELLER HYDRANT		13 EA	13 EA		January 1, 2027
Meter Parts					
FORD MTR SETTER	85 EA		85 EA		January 1, 2027
MUELLER MTR SETTER		217 EA	217 EA		January 1, 2027
Water Pipe					
6" CL150 C900 PVC PIPE	268 LF	111 LF	379 LF		January 1, 2057
8" CL150 C900 PVC PIPE	4558 LF	5018 LF	9576 LF		January 1, 2057
10" CL150 C900 PVC PIPE					
12" CL150 C900 PVC PIPE	2166 LF	172 LF	2338 LF		January 1, 2057
14" CL165 C905 PVC PIPE					
16" CL165 C905 PVC PIPE	2602 LF	3621 LF	6223 LF		January 1, 2057
18" CL165 C905 PVC PIPE					
24" CL165 C905 PVC PIPE					
Misc. System Hardware					
Elbows, Tees, Crosses, Reducers					January 1, 2027

Vizcaya System Parts

Vizcaya Water Sytem Parts List

Item Description	Vizcaya QTY	Totals	Maint. Required Date (Operator)	Replacement Date
Water Valves				
2" Clow Gate Valve	3EA	3EA		January 1, 2027
6" Clow gate Valve	9EA	9EA		January 1, 2027
8" Clow Gate Valve	4 EA	4 EA		January 1, 2027
12" Clow GATE VAL	5 EA	5 EA		January 1, 2027
Fire Hydrants				
Clow HYDRANT	9 EA	9 EA		January 1, 2027
Meter Parts				
FORD MTR SETTER	33 EA	33 EA		January 1, 2027
Water Pipe				
6" CL150 C900 PVC PIPE	140 LF	140 LF		January 1, 2057
8" CL150 C900 PVC PIPE	1246 LF	1246 LF		January 1, 2057
12" CL150 C900 PVC PIPE	2752 LF	2752 LF		January 1, 2057
Misc. System Hardware				
Elbows, Tees, Crosses, Reducers,				January 1, 2027
Blow-off assembly				

APPENDIX C

EAGLE FIRE DEPARTMENT
966 E. Iron Eagle Dr.
EAGLE, IDAHO 83616

RECEIVED & FILED
CITY OF EAGLE
APR 16 2008
File:
Route to:

Dan Friend, Fire Chief
Kurt McClenny, Fire Marshal
(208 939-6463 / Fax (208) 939-2717

FIRE PREVENTION BUREAU

4/16/2008

Dear Mr. Echeita,

Pursuant to your request, Eagle Fire Department has tested the City of Eagle Western Expansion Area water system in the Legacy subdivision for available flow capacity. Eagle Fire Department personnel have witnessed fire hydrant flows with the City of Eagle employees and have had no results less than 1000 GPM. This flow is the minimum acceptable flow in the City of Eagle and will allow construction of one and two family dwellings up to 3,600 square feet per the International Fire Code. If a builder desires to construct a structure with greater square footages, they will be required to submit proof of a fire suppression system in the home, or conduct site specific testing in the presence of the department to verify that adequate capacity exists in the system at the time of construction.

If you need further information or have any questions regarding this transmittal please give me a call.

Andrew Cater
Division chief
Eagle Fire Department

HOLLADAY ENGINEERING CO.
ENGINEERS • CONSULTANTS
32 N. Main P.O. Box 235 Payette, ID 83661
(208) 642-3304 • Fax # (208) 642-2159

January 28, 2008

Bill Vaughan
Zoning Administrator
City of Eagle
P.O. Box 1520
Eagle, ID 83616

RE: **Legacy Well House (Eagle Well #4)**
HECO Reference No. EG 061204_WA

Dear Mr. Vaughan:

Holladay Engineering Company, as project engineer, has observed the construction of the well house for the Legacy Well (Eagle Well #4). This project included the construction of a well house, pump string, pumping system, electrical system, and backup-power. Based upon the observations made during construction, we feel that the project was completed in conformance with the approved construction plans on file with the City of Eagle and applicable Idaho Standards for Public Works Construction.

Sincerely,
HOLLADAY ENGINEERING COMPANY

PROFESSIONAL ENGINEER
REGISTERED
12246
01-28-2008
STATE OF IDAHO
KASEY K. KETTERLING

By: _____
Kasey Ketterling, P.E.

cc: Todd Santiago – Idaho Development Services, Inc.

WATER • WASTEWATER • SOLID WASTE • PUBLIC UTILITIES • STRUCTURES • PLANNING • STUDIES

Stanley Consultants INC.

A Stanley Group Company
Engineering, Environmental and Construction Services - Worldwide

January 7, 2008

Kasey Ketterling, P.E.
City of Eagle Engineer
660 E. Civic Lane
P.O. Box 1520
Eagle, Idaho 83616

Dear Mr. Ketterling:

Subject: Mosca Seca No. 1 & 2 Water Distribution Plans

Based upon the observations performed by our office during construction, I feel that the water main pipes, fittings, valves, and trenching was completed within substantial conformance of the approved plans on file with the City of Eagle and in accordance with the Idaho Standards for Public Works Construction.

Sincerely,

Stanley Consultants, Inc.

PROFESSIONAL ENGINEER REGISTERED 10683 STATE OF IDAHO W. SCOTT WONDERS

1/7/08

W. Scott Wonders, P.E.

WSW:DOC

2264 Bonito Way • Suite 150 • Meridian, ID 83642 • phone 208.288.0573 • fax 208.288.0574
www.stanleyconsultants.com

HOLLADAY ENGINEERING CO.
ENGINEERS • CONSULTANTS
32 N. Main P.O. Box 235 Payette, ID 83661
(208) 642-3304 • Fax # (208) 642-2159

February 01, 2008

Bill Vaughan
Zoning Administrator
City of Eagle
P.O. Box 1520
Eagle, ID 83616

RE: **Eaglefield Well House (Eagle Well #5)**
HECO Reference No. EG 013305_WA

Dear Mr. Vaughan:

Holladay Engineering Company, as project engineer, has observed the construction of the well house for the Eaglefield Well (Eagle Well #5). This project included the construction of a well house, pump string, pumping system, electrical system, and backup-power. Based upon the observations made during construction, we feel that the project was completed in conformance with the approved construction plans on file with the City of Eagle and applicable Idaho Standards for Public Works Construction.

Sincerely,
HOLLADAY ENGINEERING COMPANY

PROFESSIONAL ENGINEER
REGISTERED
12246
2-01-2008
STATE OF IDAHO
KASEY K. KETTERLING

By: _____
Kasey Ketterling, P.E.

cc: Peter Harris – Harris Homes

LANDMARK ENGINEERING & PLANNING, INC.

332 N. Broadmore Way
Nampa ID, 83687
Ph: (208) 442-6300 • Fax: (208) 466-0944

To: Kasey Ketterling, P.E.
Holladay Engineering
32 N. Main St.
Payette, ID 83661

Date: January 31, 2008

Re: **Eaglefield Estates Subdivision No. 1**

Dear Kasey,

Construction for the above mentioned project is substantially complete. Landmark Engineering and Planning has observed the construction related to the project and hereby states that the project appears to substantially meet the requirements of the plans and specifications. Please note that ACHD conducts their own observations for all improvements related to roadway construction and also hired their own soils inspection and testing agency.

As you are aware, there are some minor items that will be completed this upcoming spring that have been bonded for. Those items are related to pressure irrigation and piping of the Drainage District No.2 ditch.

We have previously submitted observation reports, as-built drawings and soils reports for the project. Note that I have included a certification letter from Bob Arnold, P.E. concerning the backfill of the utilities.

Please call should you have any question or need further information. I can be reached at (208) 442-6300.

Sincerely,

PROFESSIONAL ENGINEER REGISTERED 8856 STATE OF IDAHO JOHN G. CARPENTER

John G. Carpenter, P.E.

Cc: File No. C04023
Peter Harris

HOLLADAY ENGINEERING CO.
ENGINEERS • CONSULTANTS
32 N. Main P.O. Box 235 Payette, ID 83661
(208) 642-3304 • Fax # (208) 642-2159

February 01, 2008

Bill Vaughan
Zoning Administrator
City of Eagle
P.O. Box 1520
Eagle, ID 83616

RE: **Eaglefield Well House (Eagle Well #5)**
HECO Reference No. EG 013305_WA

Dear Mr. Vaughan:

Holladay Engineering Company, as project engineer, has observed the construction of the well house for the Eaglefield Well (Eagle Well #5). This project included the construction of a well house, pump string, pumping system, electrical system, and backup-power. Based upon the observations made during construction, we feel that the project was completed in conformance with the approved construction plans on file with the City of Eagle and applicable Idaho Standards for Public Works Construction.

Sincerely,
HOLLADAY ENGINEERING COMPANY

PROFESSIONAL ENGINEER
REGISTERED
12246
2-01-2008
STATE OF IDAHO
KASEY K. KETTERLING

By: _____
Kasey Ketterling, P.E.

cc: Peter Harris – Harris Homes

WATER • WASTEWATER • SOLID WASTE • PUBLIC UTILITIES • STRUCTURES • PLANNING • STUDIES

LANDMARK ENGINEERING & PLANNING, INC.

332 N. Broadmore Way
Nampa ID, 83687
Ph: (208) 442-6300 • Fax: (208) 466-0944

To: Kasey Ketterling, P.E.
Holladay Engineering
32 N. Main St.
Payette, ID 83661

Date: January 31, 2008

Re: **Eaglefield Estates Subdivision No. 1**

Dear Kasey,

Construction for the above mentioned project is substantially complete. Landmark Engineering and Planning has observed the construction related to the project and hereby states that the project appears to substantially meet the requirements of the plans and specifications. Please note that ACHD conducts their own observations for all improvements related to roadway construction and also hired their own soils inspection and testing agency.

As you are aware, there are some minor items that will be completed this upcoming spring that have been bonded for. Those items are related to pressure irrigation and piping of the Drainage District No.2 ditch.

We have previously submitted observation reports, as-built drawings and soils reports for the project. Note that I have included a certification letter from Bob Arnold, P.E. concerning the backfill of the utilities.

Please call should you have any question or need further information. I can be reached at (208) 442-6300.

Sincerely,

PROFESSIONAL ENGINEER REGISTERED 6856 STATE OF IDAHO JOHN G. CARPENTER

John G. Carpenter, P.E.

Cc: File No. C04023
Peter Harris

Idaho Surveying and Rating Bureau, Inc.

Hydrant Flow Result Sheet

City:	Eagle	Static Psi	[redacted]
Date:	1/23/2008	Residual	[redacted]
Time:	10:45 AM	Hydrant Flow	2026
Location:	Eagle Landing Ct.	Flow @ 20 PSI	2765
Near:	Legacy Subdivision	Pressure @ 1500 GPM	72

Hydrant Number

Data Inputs

Static	84 psi	Residual	83 psi
Pitot	20 psi	Diameter	2 1/2 inches
Cd	0.75	Flowing	2026 gpm

Flowing @ 20 psi = 2765 gpm

Water Supply Graph

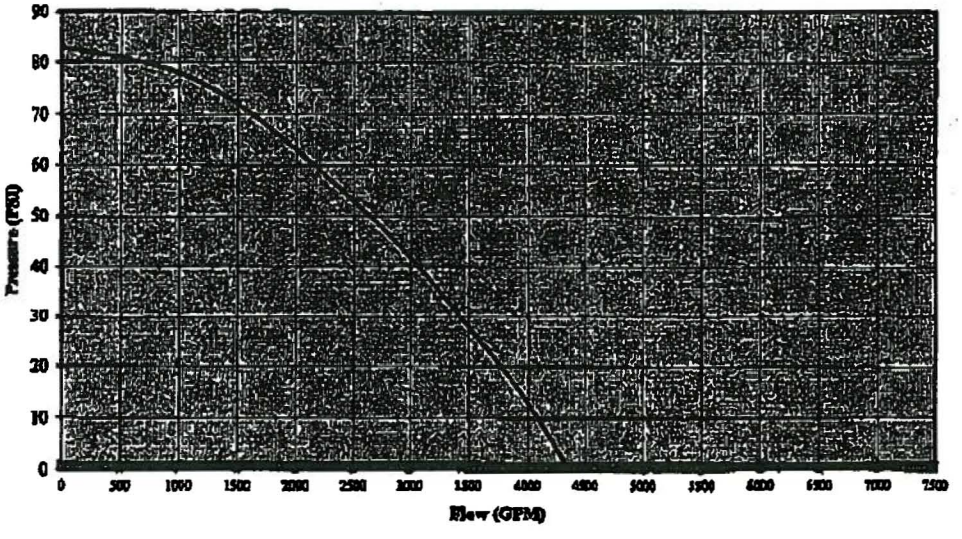

RECEIVED & FILED
CITY OF EAGLE
JAN 23 2008
File: _____
Route to: _____

EAGLE FIRE DEPARTMENT

966 E. Iron Eagle Dr.
EAGLE, IDAHO 83616

Dan Friend, Fire Chief
Kurt McClenny, Fire Marshal
(208 939-6463 / Fax (208) 939-2717

FIRE PREVENTION BUREAU

01/23/2008
To, City of Eagle
Attention, Shirley Kline

The Eagle Fire Department has observed the fire flows and access requirements for the Legacy Subdivision, Eagle Idaho, all Fire Department requirements have been met for approval of building permits to be issued.

If you have any questions please give me a call.

Reviewed By Adrian Cate Date 1/23/2008

West Eagle Water System
Start up Protocol 12-12-07/12-13-07

Following is the start-up protocol for the **Legacy** water system. This system contains artesian and deep well pumping components. This procedure is intended to be followed in order.

Time **8:02**

I. Artesian Flow Test **12-12-07**

a. Prior to any system operation, measure system pressure.

6.5 psi

Time **8:21**

b. Prior to running any pumps, the artesian drain shall be opened and allowed to flow until stable.

6.5 psi (after 5 minutes)

**Allow 10 minute rest

Time **9:13**

Record value on totalizing meter **0KG**

II. Artesian Pump Test – Flow shall be discharged out of fire hydrant to the pond system

a. Low flow pump

Time **9:15**

i. Run pump at 40 Hz (minimum 10 minutes)
Flow **125** gpm
Pressure **6** psi

Time **9:25**

ii. Run pump at 50 Hz (minimum 10 minutes)
Flow **137** gpm
Pressure **7** psi

Time **9:35**

iii. Run pump at 60 Hz (minimum 10 minutes)
Flow **148** gpm
Pressure **7.5** psi

b. Second pump (with low flow pump)

Time **9:46**

i. Run pump at 40 Hz (minimum 10 minutes)
Flow **326** gpm
Pressure **17.5**psi

Time **9:56**

ii. Run pump at 50 Hz (minimum 10 minutes)
Flow **359** gpm
Pressure **18** psi

Time**10:13**

iii. Run pump at 60 Hz (minimum 10 minutes)
Flow **359** gpm
Pressure **19.5** psi

c. Third pump (all 3 pumps running)**12-13-07**

i. Run pump at 40 Hz (minimum 10 minutes)

Time **8:18**

Flow **655** gpm

Pressure **9.5** psi

ii. Run pump at 50 Hz (minimum 10 minutes)

Time**8:28**

Flow **673** gpm

Pressure **11.3** psi

iii. Run pump at 60 Hz (minimum 10 minutes)

Time **8:38**

Flow **681** gpm

Pressure **12psi**

Time**9:00**

d. Artesian Fire Flow test

i. Run all three pumps at maximum Hz for 4 hours

ii.	10 minutes	Flow **578gpm**	Pressure **10psi**
iii.	30 minutes	Flow **574gpm**	Pressure **9psi**
iv.	60 minutes	Flow **575gpm**	Pressure **8psi**
v.	2 hours	Flow **574gpm**	Pressure **7.5psi**
vi.	3 hours	Flow **573gpm**	Pressure **5.5psi**
vii.	4 hours	Flow **570gpm**	Pressure **5psi**

Time**3:45**

Time**1:00** III. Record value on totalizing meter **186KG**

IV. Deep Well Pump Test Allow 4 hour system rest before starting test

i. Run pump at 40 Hz (minimum 10 minutes)

Time**5:30**

Flow **1250** **gpm**

Pressure **21** **psi**

ii. Run pump at 50 Hz (minimum 10 minutes)

Time**5:40**

Flow **1590gpm**

Pressure **35** **psi**

iii. Run pump at 60 Hz (minimum 10 minutes)

Time**5:50**

Flow **1886** **gpm**

Pressure **47** **psi**

Time V. Record value on totalizing meter **318KG**

VI. Deep Well override test

a. While artesian pumps are running, turn on the deep well pump. Test system ability to switch over and turn off artesian pumps.

Time

b. Test Performance **Pass**

VII. Generator start up test

a. While running the system, turn off the main power.

b. Observe ability of generator to automatically start.

Time10:00

c. Test Performance **1-16-08**

West Eagle Water System
Start up Protocol 12-13-07

Following is the start-up protocol for the **Eaglefield** water system. This system contains artesian and deep well pumping components. This procedure is intended to be followed in order.

Time 8:20

I. Artesian Flow Test

a. Prior to any system operation, measure system pressure.

10 psi

Time 8:25

b. Prior to running any pumps, the artesian drain shall be opened and allowed to flow until stable.

10 psi (after 5 minutes)

**Allow 10 minute rest

Time9:00/ 3:58

Record value on totalizing meter **4326 First/223975 2nd**

II. Artesian Pump Test – Flow shall be discharged out of fire hydrant to the pond system

a. Low flow pump

Time3:58

i. Run pump at 40 Hz (minimum 10 minutes)
Flow **130** gpm
Pressure **8** psi

Time4:08

ii. Run pump at 50 Hz (minimum 10 minutes)
Flow **143** gpm
Pressure **7.5** psi

Time4:18

iii. Run pump at 60 Hz (minimum 10 minutes)
Flow **163** gpm
Pressure **7** psi

b. Second pump (with low flow pump)

Time4:28

i. Run pump at 40 Hz (minimum 10 minutes)
Flow **285** gpm
Pressure 9psi

Time4:38

ii. Run pump at 50 Hz (minimum 10 minutes)
Flow **305** gpm
Pressure **12.5psi**

Time4:48

iii. Run pump at 60 Hz (minimum 10 minutes)
Flow **321** gpm
Pressure **12** psi

c. Third pump (all 3 pumps running)

i. Run pump at 40 Hz (minimum 10 minutes)

Time4:58

Flow 617 gpm

Pressure 11 psi

ii. Run pump at 50 Hz (minimum 10 minutes)

Time5:08

Flow 692 gpm

Pressure 9 psi

iii. Run pump at 60 Hz (minimum 10 minutes)

Time5:18

Flow 740 gpm

Pressure 10psi

Time11:45

d. Artesian Fire Flow test

i. Run all three pumps at maximum Hz for 4 hours

ii. 10 minutes Flow 705gpm, Pressure 30psi

iii. 30 minutes Flow 703gpm, Pressure 29psi

iv. 60 minutes Flow 704gpm, Pressure 29.5psi

v. 2 hours Flow 703gpm, Pressure 29psi

vi. 3 hours Flow 705gpm, Pressure 29psi

Time3:45

vii. 4 hours Flow 703gpm, Pressure 29psi

Time

III. Record value on totalizing meter 223975/241354

12-20-07 Totalizer=257965

IV. Deep Well Pump Test Allow 4 hour system rest before starting test

i. Run pump at 40 Hz (minimum 10 minutes)

Time1:26

Flow 1721 gpm

Pressure 31 psi

ii. Run pump at 50 Hz (minimum 10 minutes)

Time1:36

Flow 2106 gpm

Pressure 50 psi

iii. Run pump at 60 Hz (minimum 10 minutes)

Time1:46

Flow 2460 gpm

Pressure 78 psi

Time1:46

V. Record value on totalizing meter 317780

VI. Deep Well override test

a. While artesian pumps are running, turn on the deep well pump. Test system ability to switch over and turn off artesian pumps.

Time

b. Test Performance Pass

VII. Generator start up test

a. While running the system, turn off the main power.

b. Observe ability of generator to automatically start.

Time

c. Test Performance Pass

APPENDIX D

APPENDIX D
(Unchanged)

See AMENDED MASTER PLAN
Revised November 2005

APPENDIX E

APPENDIX E
(Unchanged)

See AMENDED MASTER PLAN
Revised November 2005

APPENDIX F

SPF Water Engineering, LLC
water resource consultants

By TS Date 4/4/06 Client Eaglefield Sheet 1 of 1
Chkd By _____ Description Final Well Design - Eagle Well #4 Job No 421.00 10

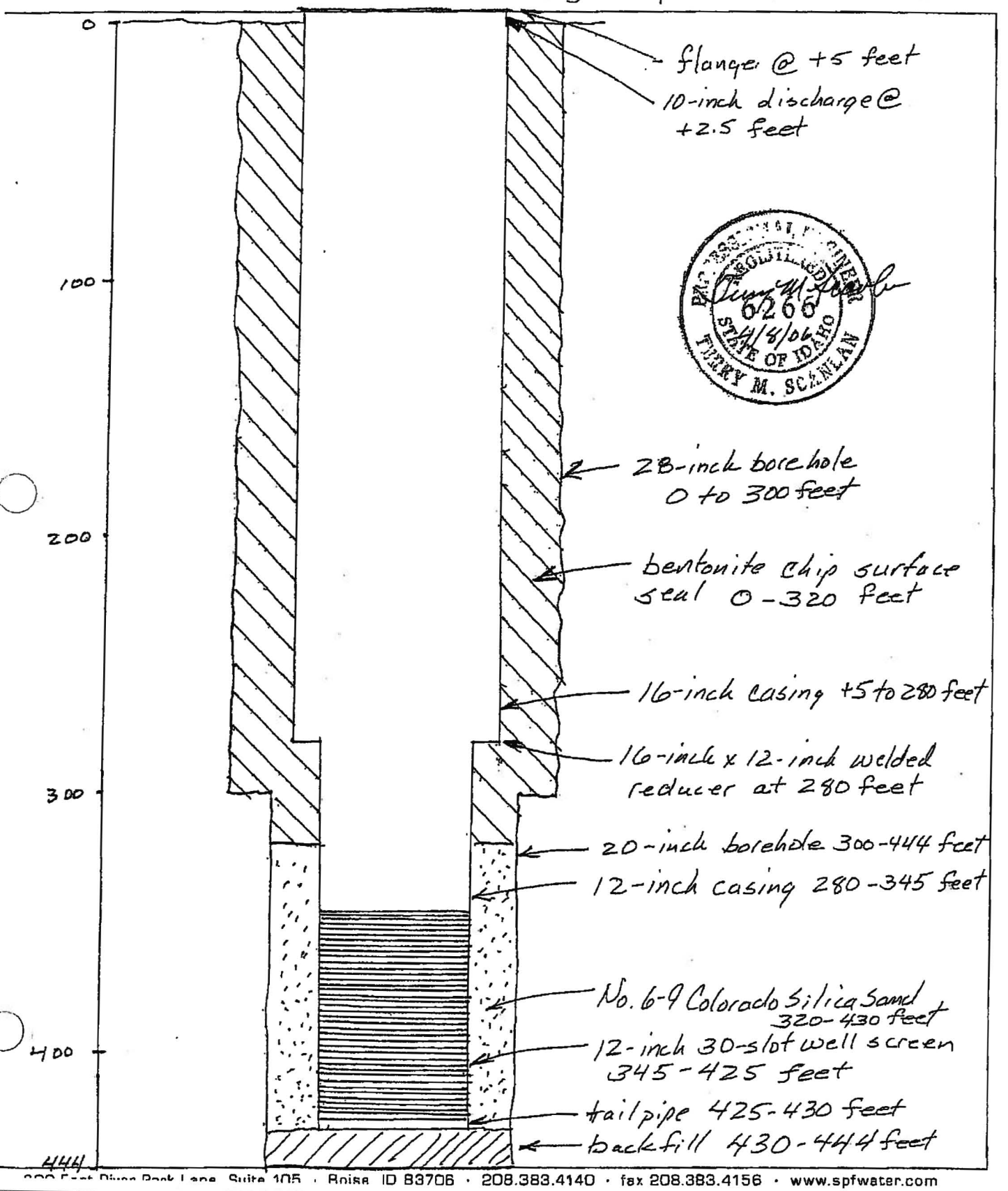

800 East River Park Lane, Suite 105 · Boise ID 83706 · 208.383.4140 · fax 208.383.4156 · www.spfwater.com

Form 238-[redacted] OF WATER RESOURCES
6/02

WELL DRILLER'S REPORT

[redacted]

Office Use Only
Inspected by _____
Twp ____ Rge ____ Sec ____
____ 1/4 ____ 1/4 ____ 1/4
Lat: : : Long: : :

1. WELL TAG NO. D 0042405
[redacted]ING PERMIT NO. 828605 - 837870
Right or Injection Well No. 63-32089, 63-32090

2. OWNER:
Name CITY OF EAGLE
Address 310 E. STATE ST.
City EAGLE State ID Zip 83616

3. LOCATION OF WELL by legal description:
You must provide address or Lot, Blk, Sub. or Directions to well. WELL #2
Twp. 4 North ☒ or South ☐ (EAGLEFIELD)
Rge. 1 East ☐ or West ☒
Sec. 11 1/4 NW 1/4 SE 1/4
Gov't Lot ____ County ADA
Lat: : : Long: : :
Address of Well Site 50' W of INTERSECTION of W TATLOCK Dr + W GOLDEN EAGLE WAY City EAGLE
Lot 34 Blk. 8 Sub. Name EAGLEFIELD ESTATES

4. USE:
☐ Domestic ☒ Municipal ☐ Monitor ☐ Irrigation
☐ Thermal ☐ Injection ☒ Other TEST

5. TYPE OF WORK check all that apply (Replacement etc.)
☒ New Well ☐ Modify ☐ Abandonment ☐ Other ____

6. DRILL METHOD:
☐ Air Rotary ☐ Cable ☐ Mud Rotary ☒ Other REVERSE

7. SEALING PROCEDURES

Seal Material	From	To	Weight / Volume	Seal Placement Method
CEMENT GROUT	0	320	24 yds	PUMPED FROM BOTTOM TO TOP

Was drive shoe used? ☐Y ☒N Shoe Depth(s) ____
Was drive shoe seal tested? ☐Y ☐N How? ____

8. CASING/LINER: 280' 16"x12" REDUCER.

Diameter	From	To	Gauge	Material	Casing	Liner	Welded	Threaded
16	+5	280	.375	STEEL	☒	☐	☒	☐
12	281	345	.375	STEEL	☒	☐	☒	☐
					☐	☐	☐	☐

Length of Headpipe ____ Length of Tailpipe 5'
Packer ☐Y ☒N Type ____

9. PERFORATIONS/SCREENS PACKER TYPE
Perforation Method ____
Screen Type & Method of Installation JOHNSON WIRE WRAP

From	To	Slot Size	Number	Diameter	Material	Casing	Liner
345	425	.030		12	S.S.	☒	☐
						☐	☐
						☐	☐

10. FILTER PACK

Filter Material	From	To	Weight / Volume	Placement Method
#6-9 CSSR SAND	320	425	30,000	DRY POUR

11. STATIC WATER LEVEL OR ARTESIAN PRESSURE:
____ ft. below ground Artesian pressure 8.1 lb.
[illegible]th flow encountered ____ ft. Describe access port or control devices: ____
LANGE CAP W/ 2-1¼" PIPE PLUGS

12. WELL TESTS:
☐ Pump ☐ Bailer ☐ Air ☐ Flowing Artesian

Yield gal/min.	Drawdown	Pumping Level	Time
1125 gpm		45.2'	10 MIN

Water Temp. ____ Bottom hole temp. ____
Water Quality test or comments: ____
Depth first Water Encountered ____

13. LITHOLOGIC LOG: (Describe repairs or abandonment)

Bore Dia.	From	To	Remarks: Lithology, Water Quality & Temperature	Water Y	Water N
28	0	3	TOP SOIL		
	3	28	RIVER GRAVEL		
	28	48	TAN CLAY		
	48	56	SAND		
	56	63	RUSTY TAN CLAY		
	63	135	SAND W/SM TAN CLAY STREAKS		
	135	183	BRN CLAY W/SAND STREAKS		
	183	189	FINE-MED SAND		
	189	194	TAN CLAY		
	194	315	SAND SM GRAVEL		
	315	332	CLAY		
↓	332	290	SAND FINE-MED W/SM CLAY STREAKS		
20	290	297	SAND-FINE		
	297	339	BR. RUSTY, GREEN + GRAY CLAY		
	339	436	COARSE SAND, SOME GRAVEL		
	436	444	BRN RUSTY CLAY		

Completed Depth 430' (Measurable)
Date: Started 3-21-06 Completed 5-5-06

14. DRILLER'S CERTIFICATION
I/We certify that all minimum well construction standards were complied with at the time the rig was removed.

Company Name RIVERSIDE INC Firm No. 333
Principal Driller [signature] Date 5-22-06
and
Driller or Operator II Justin Chase Date 5-22-06
Operator I ____ Date ____
Principal Driller and Rig Operator Required.
Operator I must have signature of Driller/Operator II.

FORWARD WHITE COPY TO WATER RESOURCES

340A/~~360A~~ Series
Single Stage End Suction Pumps

- Capacities to 4500 G.P.M. (850 M^3/HR)
- Heads to 370 Feet (78 Meters)
- Temperatures to 300°F (149°C)

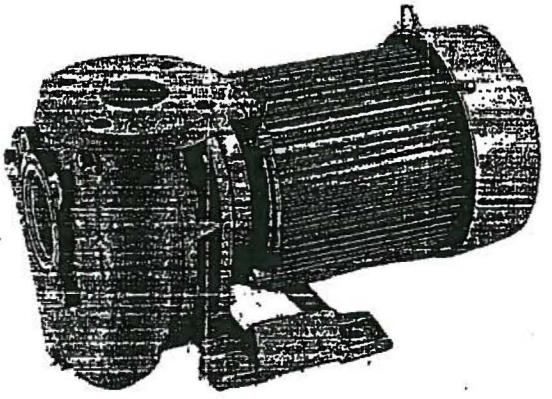

Model 341A

Eagle Field Well House
Main Pump

AURORA®
PENTAIR PUMP GROUP

Eagle Field Booster (Main)

PUMP DATA SHEET
AURORA PUMPS

H2Optimize ver: 6.041
07/11/07

Selection file: (untitled)
Catalog: AURORA60.MPC v 1

Curve: PC116282

Design Point: Flow: 180 US gpm
Head: 130 ft

Pump: 340/360-ENCL - 3600 **Size:** 2x2.5x7A
Speed: 3500 rpm Dia: 5.8125 in

Limits: Temperature: 300 °F Sphere size: 0.375 in
Pressure: 175 psi_g Power: — bhp

Specific Speed: Ns: 1246 Nss: 8260

Dimensions: Suction: 2.5 in Discharge: 2 in

Motor: 15 hp Speed: 3600 Frame: ~~254T~~ 213 JM
NEMA Standard ODP
sized for Max Power on Design Curve
10HP

Fluid: Water
Temperature: 60 °F
SG: 1
Viscosity: 1.122 cP
Vapor pressure: 0.2568 psi_a
Atm pressure: 14.7 psi_a

NPSHa: — ft

Piping:
System: —
Suction: — in
Discharge: — in

— Data Point —
Flow: 180 US gpm
Head: 133 ft
Eff: 70%
Power: 8.69 bhp
NPSHr: 8.93 ft

— Design Curve —
Shutoff Head: 143 ft
Shutoff dP: 61.9 psi
Min Flow: - US gpm
BEP: 75% eff
@ 265 US gpm
NOL Pwr: 11.7 bhp
@ 364 US gpm

— Max Curve —
Max Pwr: 19.4 bhp
@ 363 US gpm

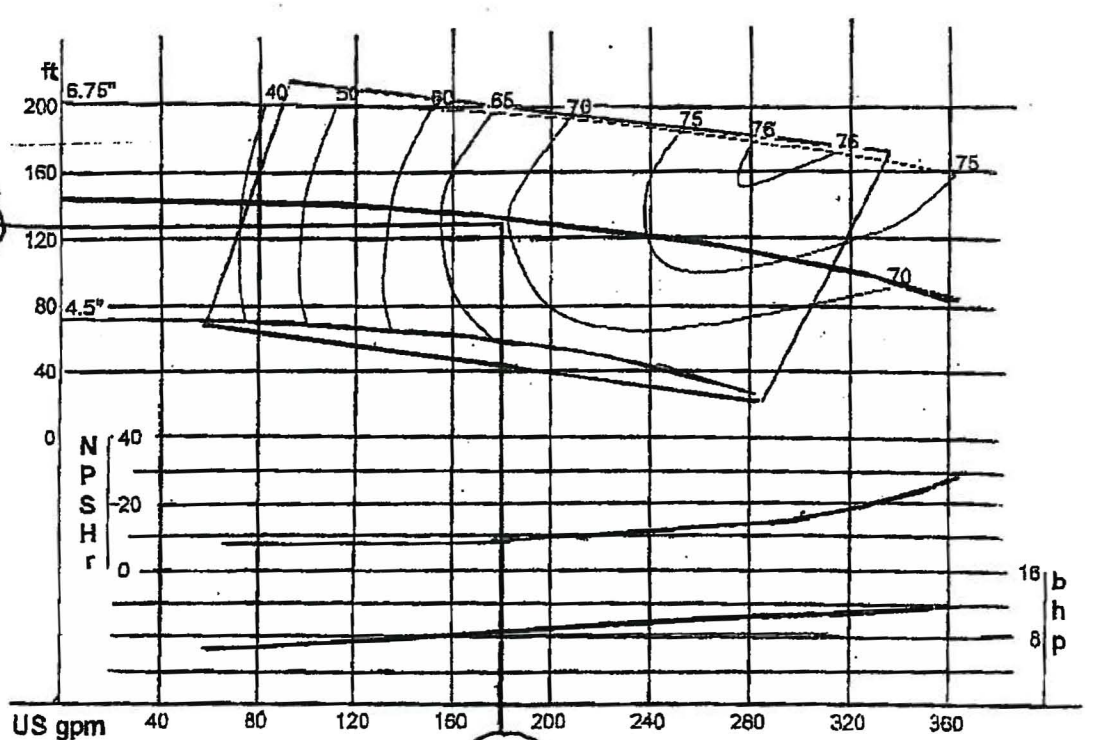

— PERFORMANCE EVALUATION —

Flow US gpm	Speed rpm	Head ft	Pump %eff	Power bhp	NPSHr ft	Motor %eff	Motor kW	Hrs/yr	Cost /kWh
216	3500	127	73	9.41	10.7				
180	3500	133	70	8.69	8.93				
144	3500	137	62	8.01	8.01				
108	3500	140	52	7.25	8				
72	3500	141	39	6.53	8				

Project Name:
Author Name:
Date Created:

AURORA
PENTAIR PUMP GROUP

Single Stage End Suction-341

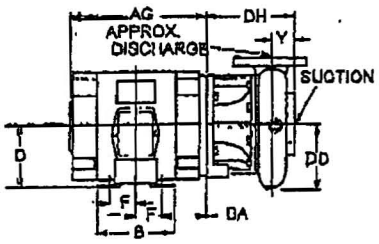

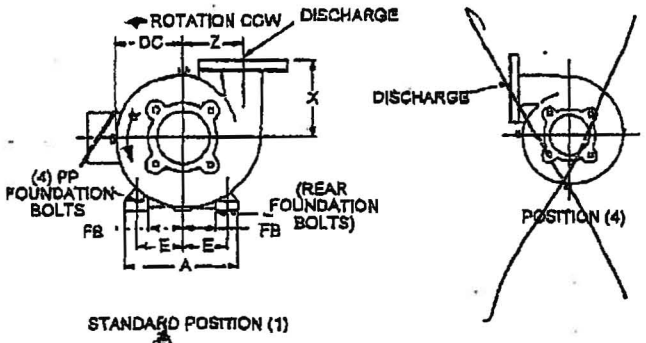

Units of Measurement: Inches

PP	FB	X	Y	Z	DC	DD	DH	A	B	D	E	F	H	AG APPROX	BA
0.5	3.88	5.63	1.88	4.56	5.38	5.81	6.81	10.5	9.0	5.25	4.25	3.5	0.41	15.0	4.5

Pump Type: 340/360-ENCL	Pump Size: 2x2-1/2x7A
Pump Speed: 3600 RPM	Pump Weight Only: 81.0 lbs
Frame Size: 215JM	Power Frame: N/A
Cover Size:	Frequency: 60 HZ
Coupling: Standard	Pump Flange: 2.5" suction 2" discharge
Base Plate: None	Discharge Position: vertical
Enclosure: Open Drip Proof	Rotation: Standard
Voltage/Phase: 3 PH 230/460	HorsePower: 10

Drawing Notes:

1. ALL DIMENSIONS ARE IN INCHES OR METRIC (MILLIMETERS).
2. DIMENSIONS MAY VARY ± 1/4 (6 mm).
3. NOT FOR CONSTRUCTION PURPOSES UNLESS CERTIFIED.
4. CHECK DISCHARGE POSITION.
   CASING DIMENSIONS WHICH EXCEED DIMENSION "D" MAY REQUIRE PADS FOR THE MOTOR.
5. CONDUIT BOX IS SHOWN IN APPROXIMATE LOCATION.
   DIMENSIONS ARE NOT SPECIFIED AS THEY VARY WITH EACH MOTOR MANUFACTURER.
6. 2" (51 mm) DISCHARGE AND LARGER PUMPS ARE 125# ANSI FLANGED CONNECTIONS.
7. 1-1/4(IN) DISCHARGE X 1-1/2 (IN) SUCTION AND 7 INCH AND 9

INCH CASE BORE PUMPS WILL BE WITH THREADED CONNECTIONS.

8. INFORMATION CONTAINED HEREIN IS CONFIDENTIAL; IT IS THE PROPERTY OF PENTAIR PUMP GROUP; IT IS TO BE USED SOLELY FOR THE PURPOSE PROVIDED, AND IT IS NOT TO BE DISCLOSED TO OTHERS FOR OTHER PURPOSE WITHOUT THE PRIOR WRITTEN CONSENT OF PENTAIR PUMP GROUP.

Comments:

Motor is suitable for 200v 3phase power

Material of Construction and Design Details

Material of Construction

Pump Part	Standard Fitted	Bronze Fitted	All-Iron	*All-Bronze
Casing	Cast Iron ASTM A48	Cast Iron ASTM A48	Cast Iron ASTM A48	Bronze ASTM B62
Case Wearing Ring	Bronze ASTM B62	Bronze ASTM B62	Cast Iron ASTM A48	Bronze ASTM B62
Impeller	Cast Iron ASTM A48	Bronze ASTM B584	Cast Iron ASTM A48	Bronze ASTM B584
Motor Bracket	Cast Iron ASTM A48	Cast Iron ASTM A48	Cast Iron ASTM A48	Cast Iron ASTM A48
Shaft	Steel AISI C1045	Steel AISI C1045	Steel AISI C1045	Steel AISI C1045
Sleeve	Bronze ASTM B62	Bronze ASTM B62	Stainless Steel AISI 316	Bronze ASTM B62
Power Frame (344A & 364A)	Cast Iron ASTM A48	Cast Iron ASTM A48	Cast Iron ASTM A48	Cast Iron ASTM A48
Mechanical Seal 340A Series 360A Series (Optional)	303 stainless steel metal parts, "Buna-N" elastomer parts, Ni-Resist seat and carbon washer			303 stainless steel metal parts, viton elastomer, ceramic seat, and carbon washer
Stuffing Box	Cast Iron ASTM A48	Cast Iron ASTM A48	Cast Iron ASTM A48	Bronze ASTM B62
Packing (Standard) 360A Series Only	Interwoven, graphited fiber diagonally cut			

* All Bronze optionally available in 361A and 364A pumps only.

MODELS 341A-342A-361A-362A
60 HERTZ MOTOR DATA SHEET
~~1 PHASE: NOT AVAILABLE~~
3 PHASE: 200 (ONLY) OR 230/460
~~OR 575 VOLTS~~

JM ~~& JP MOTOR FRAMES~~

HP	RPM	C FLANGE MOTORS HORIZONTAL FOOT MOUNTED 143-184JM ONLY-SUPPORT FOOT MOUNTED ON PUMP O.D.P. - TOTALLY ENC. - EXP. PROOF				MAGNETIC STARTER SIZE REQ'D NEMA 1 ENCLOSURE			APPROXIMATE FULL LOAD AMPS.			
		OPEN DRIPPROOF FRAME	SERVICE FACTOR O.D.P.	TEFC & EXP. PROOF FRAME	SERVICE FACTOR TEFC & EXP. PROOF	200V & 230V	460V	575V	200V	230V	460V	575V
1	1750	143	1.15	143	1.0	00	00	00	4.0	3.5	1.8	1.4
	1150	145		145								
1-1/2	3500	143	1.15	143	1.0	00	00	00	5.4	4.7	2.4	1.9
	1750	145		145								
	1150	182		182								
2	3500	145	1.15	145	1.0	0	00	00	6.9	6	3	2.4
	1750	145		145								
	1150	184		184								
3	3500	145	1.15	182	1.0	0	0	0	9.9	8.6	4.3	3.4
	1750	182		182								
	1150	213		213								
5	3500	182	1.15	184	1.0	1	0	0	15.9	13.8	6.9	5.5
	1750	184		184								
	1150	215		215								
7-1/2	3500	184	1.15	213	1.0	1	1	1	24.3	21.1	10.5	8.4
	1750	213		213								
	1150	254		254								
10	3500	213	1.15	215	1.0	2	1	1	31	27	13.5	10.8
	~~1750~~	~~215~~		215								
	~~1150~~	~~256~~		256								
15	3500	215	1.15	254	1.0	3	2	2	45	39.2	19.6	15.7
	1750	254		254								
	1150	284		284								
20	3500	254	1.15	256	1.0	3	2	2	58.7	51	25.5	20
	1750	256		256								
	1150	286		286								
25	3500	256	1.15	284	1.0	3	2	2	72.7	63.2	31.6	25
	1750	284		284								
	1150	324		324								
30	3500	284	1.15	286	1.0	4	3	3	97.8	76.7	38.3	31
	1750	286		286								
	1150	326		326								
40	3500	286	1.15	324	1.0	4	3	3	115	100	50	40
	1750	324		324								
50	3500	324	1.15	326	1.0	5	3	3	141	123	61.5	49
	1750	326		326								
60	3500	326	1.15	N/A	1.0	5	4	4	163	142	71	57

NOTES:
1. APPROXIMATE FULL LOAD AMPS BASED ON AVERAGES FOR AURORA STANDARD O.D.P. MOTORS.
2. MAGNETIC STARTER SIZE BASED ON AURORA STANDARD O.D.P. MOTORS.
3. MODELS 341A ~~& 342A~~ USE JM MOTOR FRAMES.
   ~~MODELS 361A & 362A USE JP MOTOR FRAMES.~~

340A/~~380A~~ Series
Single Stage End Suction Pumps

- Capacities to 4500 G.P.M. (850 M^3/HR)
- Heads to 370 Feet (78 Meters)
- Temperatures to 300°F (149°C)

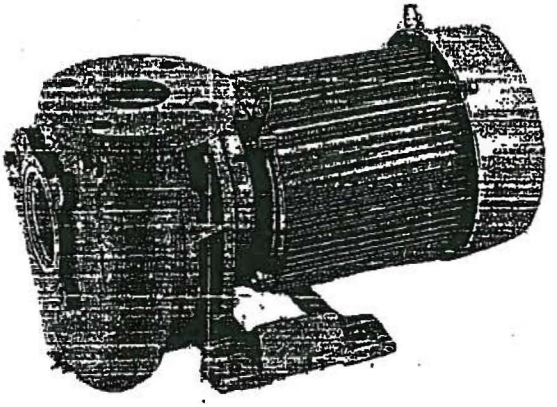

Model 341A

Eagle Field Well House
Intermediate Pumps

AURORA®
PENTAIR PUMP GROUP

H2Optimize ver: 6.041
07/11/07

Eagle Field Booster (Intermediate)

PUMP DATA SHEET
AURORA PUMPS

Selection file: (unlitled)
Catalog: AURORA60.MPC v 1

Curve: PC116272A

Design Point: Flow: 95 US gpm
Head: 110 ft

Fluid: Water
Temperature: 60 °F
SG: 1
Viscosity: 1.122 cP
Vapor pressure: 0.2568 psi_a
Atm pressure: 14.7 psi_a

Pump: 340/360-ENCL - 3600
Speed: 3500 rpm
Size: 1.25x1.5x7
Dia: 5.4375 in

Limits: Temperature: 300 °F
Pressure: 175 psi_g
Sphere size: 0.375 in
Power: — bhp

NPSHa: — ft

Specific Speed: Ns: 768 Nss: 4104

Piping: System: —
Suction: — in
Discharge: — in

Dimensions: Suction: 1.5 in Discharge: 1.25 in

Motor: 5 hp wp 7½
Speed: 3600
NEMA Standard
Frame: ~~1843~~ 184JM
ODP
sized for Max Power on Design Curve

— Data Point —
Flow: 95 US gpm
Head: 112 ft
Eff: 66%
Power: 4.03 bhp
NPSHr: 12.2 ft

— Design Curve —
Shutoff Head: 135 ft
Shutoff dP: 58.3 psi
Min Flow: - US gpm
BEP: 67% eff
@ 99 US gpm
NOL Pwr: 4.54 bhp
@ 127 US gpm

— Max Curve —
Max Pwr: 10.2 bhp
@ 166 US gpm

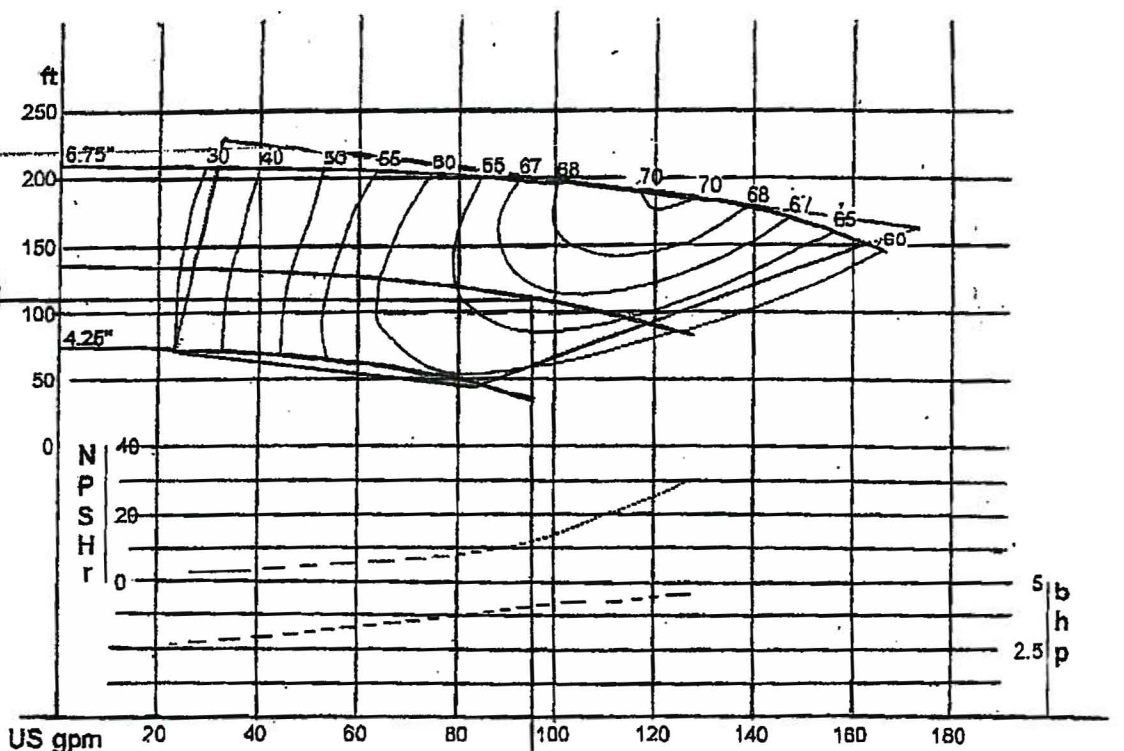

— PERFORMANCE EVALUATION —

Flow US gpm	Speed rpm	Head ft	Pump %eff	Power bhp	NPSHr ft	Motor %eff	Motor kW	Hrs/yr	Cost /kWh
114	3500	97.6	65	4.31	22				
95	3500	112	66	4.03	12.2				
76	3500	121	64	3.62	7.52				
57	3500	127	56	3.25	5.31				
38	3500	131	43	2.91	3.35				

Project Name:
Author Name:
Date Created:

AURORA®
PENTAIR PUMP GROUP

Single Stage End Suction-341

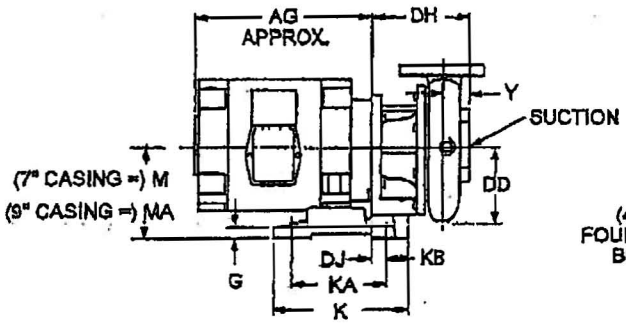

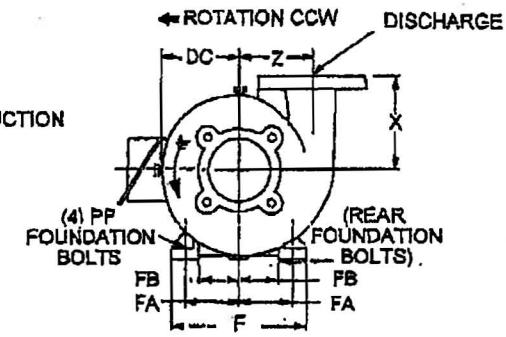

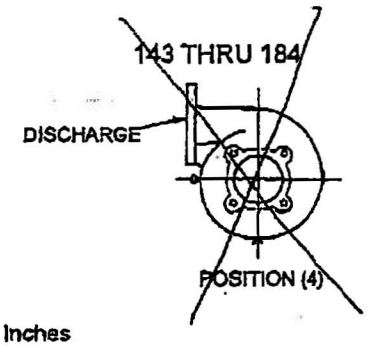

Units of Measurement: Inches

X	Y	Z	DC	DD	DH	DJ	PP	G	K	KA	KB	F	FA	FB	M	MA	AG
5.25	2.44	4.19	4.94	5.19	7.19	0.63	0.6	0.5	8.63	5.5	1.88	9.75	4.13	3.88	5.25	6.25	12.0

Pump Type: 340/360-ENCL	Pump Size: 1-1/4x1-1/2x7
Pump Speed: 3600 RPM	Pump Weight Only: 70.0 lbs
Frame Size: 184JM	Power Frame: N/A
Cover Size:	Frequency: 60 HZ
Coupling: Standard	Pump Flange: 1.5" suction 1.25" discharge
Base Plate: None	Discharge Position: vertical
Enclosure: Open Drip Proof	Rotation: standard
Voltage/Phase: 3 PH 230/460	HorsePower: 7-1/2

Drawing Notes:

1. ALL DIMENSIONS ARE IN INCHES OR METRIC (MILLIMETERS).
2. DIMENSIONS MAY VARY ± 1/4 (6 mm).
3. NOT FOR CONSTRUCTION PURPOSES UNLESS CERTIFIED.
4. CONDUIT BOX IS SHOWN IN APPROXIMATE LOCATION. DIMENSIONS ARE NOT SPECIFIED AS THEY VARY WITH EACH MOTOR MANUFACTURER.
5. CHECK DISCHARGE POSITION. CASING DIMENSIONS WHICH EXCEED 5 1/4 (133.35mm) HEIGHT MAY REQUIRE PADS FOR THE SUPPORT.
6. 2" (51 mm) DISCHARGE AND LARGER PUMPS ARE 125# ANSI FLANGED CONNECTIONS.
7. 1-1/4(IN) DISCHARGE X 1-1/2 (IN) SUCTION AND 7 INCH AND 9

INCH CASE BORE PUMPS WILL BE WITH THREADED CONNECTIONS.

8. INFORMATION CONTAINED HEREIN IS CONFIDENTIAL; IT IS THE PROPERTY OF PENTAIR PUMP GROUP; IT IS TO BE USED SOLELY FOR THE PURPOSE PROVIDED, AND IT IS NOT TO BE DISCLOSED TO OTHERS FOR OTHER PURPOSE WITHOUT THE PRIOR WRITTEN CONSENT OF PENTAIR PUMP GROUP.

Comments:

Motor is suitable for 200v 3phase power

Material of Construction and Design Details

Material of Construction

Pump Part	Standard Fitted	Bronze Fitted	All-Iron	*All-Bronze
Casing	Cast Iron ASTM A48	Cast Iron ASTM A48	Cast Iron ASTM A48	Bronze ASTM B62
Case Wearing Ring	Bronze ASTM B62	Bronze ASTM B62	Cast Iron ASTM A48	Bronze ASTM B62
Impeller	Cast Iron ASTM A48	Bronze ASTM B584	Cast Iron ASTM A48	Bronze ASTM B584
Motor Bracket	Cast Iron ASTM A48	Cast Iron ASTM A48	Cast Iron ASTM A48	Cast Iron ASTM A48
Shaft	Steel AISI C1045	Steel AISI C1045	Steel AISI C1045	Steel AISI C1045
Sleeve	Bronze ASTM B62	Bronze ASTM B62	Stainless Steel AISI 316	Bronze ASTM B62
Power Frame (344A & 364A)	Cast Iron ASTM A48	Cast Iron ASTM A48	Cast Iron ASTM A48	Cast Iron ASTM A48
Mechanical Seal 340A Series 360A Series (Optional)	303 stainless steel metal parts, "Buna-N" elastomer parts, Ni-Resist seat and carbon washer			303 stainless steel metal parts, viton elastomer, ceramic seat, and carbon washer
Stuffing Box	Cast Iron ASTM A48	Cast Iron ASTM A48	Cast Iron ASTM A48	Bronze ASTM B62
Packing (Standard) 360A Series Only	Interwoven, graphited fiber diagonally cut			

* All Bronze optionally available in 361A and 364A pumps only.

MODELS 341A-342A-361A-362A
60 HERTZ MOTOR DATA SHEET
~~1 PHASE: NOT AVAILABLE~~
3 PHASE: 200 (ONLY) OR 230/460
~~OR 575 VOLTS~~

JM & ~~JP MOTOR FRAMES~~

HP	RPM	C FLANGE MOTORS HORIZONTAL FOOT MOUNTED 143-184JM ONLY-SUPPORT FOOT MOUNTED ON PUMP O.D.P. - TOTALLY ENC. - EXP. PROOF				MAGNETIC STARTER SIZE REQ'D NEMA 1 ENCLOSURE			APPROXIMATE FULL LOAD AMPS.			
		OPEN DRIPPROOF FRAME	SERVICE FACTOR O.D.P.	TEFC & EXP. PROOF FRAME	SERVICE FACTOR TEFC & EXP. PROOF	200V & 230V	460V	575V	200V	230V	460V	575V
1	1750	143	1.15	143	1.0	00	00	00	4.0	3.5	1.8	1.4
	1150	145		145								
1-1/2	3500	143	1.15	143	1.0	00	00	00	5.4	4.7	2.4	1.9
	1750	145		145								
	1150	182		182								
2	3500	145	1.15	145	1.0	0	00	00	6.9	6	3	2.4
	1750	145		145								
	1150	184		184								
3	3500	145	1.15	182	1.0	0	0	0	9.9	8.6	4.3	3.4
	1750	182		182								
	1150	213		213								
5	3500	182	1.15	184	1.0	1	0	0	15.9	13.8	6.9	5.5
	1750	184		184								
	1150	215		215								
7-1/2	3500	184	1.15	213	1.0	1	1	1	24.3	21.1	10.5	8.4
	1750	213		213								
	1150	254		254								
10	3500	213	1.15	215	1.0	2	1	1	31	27	13.5	10.8
	~~1750~~	~~215~~		215								
	~~1150~~	~~256~~		256								
15	3500	215	1.15	254	1.0	3	2	2	45	39.2	19.6	15.7
	1750	254		254								
	1150	284		284								
20	3500	254	1.15	256	1.0	3	2	2	58.7	51	25.5	20
	1750	256		256								
	1150	286		286								
25	3500	256	1.15	284	1.0	3	2	2	72.7	63.2	31.6	25
	1750	284		284								
	1150	324		324								
30	3500	284	1.15	286	1.0	4	3	3	97.8	76.7	38.3	31
	1750	286		286								
	1150	326		326								
40	3500	286	1.15	324	1.0	4	3	3	115	100	50	40
	1750	324		324								
50	3500	324	1.15	326	1.0	5	3	3	141	123	61.5	49
	1750	326		326								
60	3500	326	1.15	N/A	1.0	5	4	4	163	142	71	57

NOTES:
1. APPROXIMATE FULL LOAD AMPS BASED ON AVERAGES FOR AURORA STANDARD O.D.P. MOTORS.
2. MAGNETIC STARTER SIZE BASED ON AURORA STANDARD O.D.P. MOTORS.
3. MODELS 341A ~~& 342A~~ USE JM MOTOR FRAMES.
~~MODELS 361A & 362A USE JP MOTOR FRAMES.~~

AMERICAN-MARSH PUMPS

SERIES 480
VERTICAL TURBINE PUMPS

Eagle Field Well House

19 AUGUST 2004

Copyright © 2004 American-Marsh Pumps

Print Report - American-Marsh Pumps

Company:
Name: Eagle Field Well
Date: 7/11/2007

Project: Eagle Field Well House

AMERICAN-MARSH PUMPS

Pump:

Size: 14MC (3 stage)
Type: 400_VRT-TURBINE/ENCL
Synch speed: 1800 rpm
Curve: 3042
Specific Speeds:
Dimensions:
Vertical Turbine:

Speed: 1760 rpm
Dia: 11 in
Impeller:
Ns: 3043
Nss: 8863
Suction: 10 in
Discharge: 10 in
Bowl size: 13.25 in
Max lateral: 0.875 in
Thrust K factor: 21.8 lb/ft

Pump Limits:

Temperature: 250 °F
Pressure: 640 psi g
Sphere size: 1.25 in

Power: 650 hp
Eye area: — in²

Search Criteria:

Flow: 2000 US gpm
Head: 210 ft

Fluid:

Water
SG: 1
Viscosity: 1.105 cP
NPSHa: — ft

Temperature: 60 °F
Vapor pressure: 0.2563 psi a
Atm pressure: 12.9 psi a

Motor:

Standard: NEMA
Enclosure: ODP

Size: 150 hp
Speed: 1800
Frame: 444T

Sizing criteria: Max Power on Design Curve

— Data Point —

Flow:	2000 US gpm
Head:	210 ft
Eff:	82%
Power:	129 hp
NPSHr:	17.9 ft

— Design Curve —

Shutoff head:	363 ft
Shutoff dP:	157 psi
Min flow:	1200 US gpm

BEP: 82% @ 2000 US gpm
NOL power:
137 hp @ 2275 US gpm

— Max Curve —

Max power:
163 hp @ 2650 US gpm

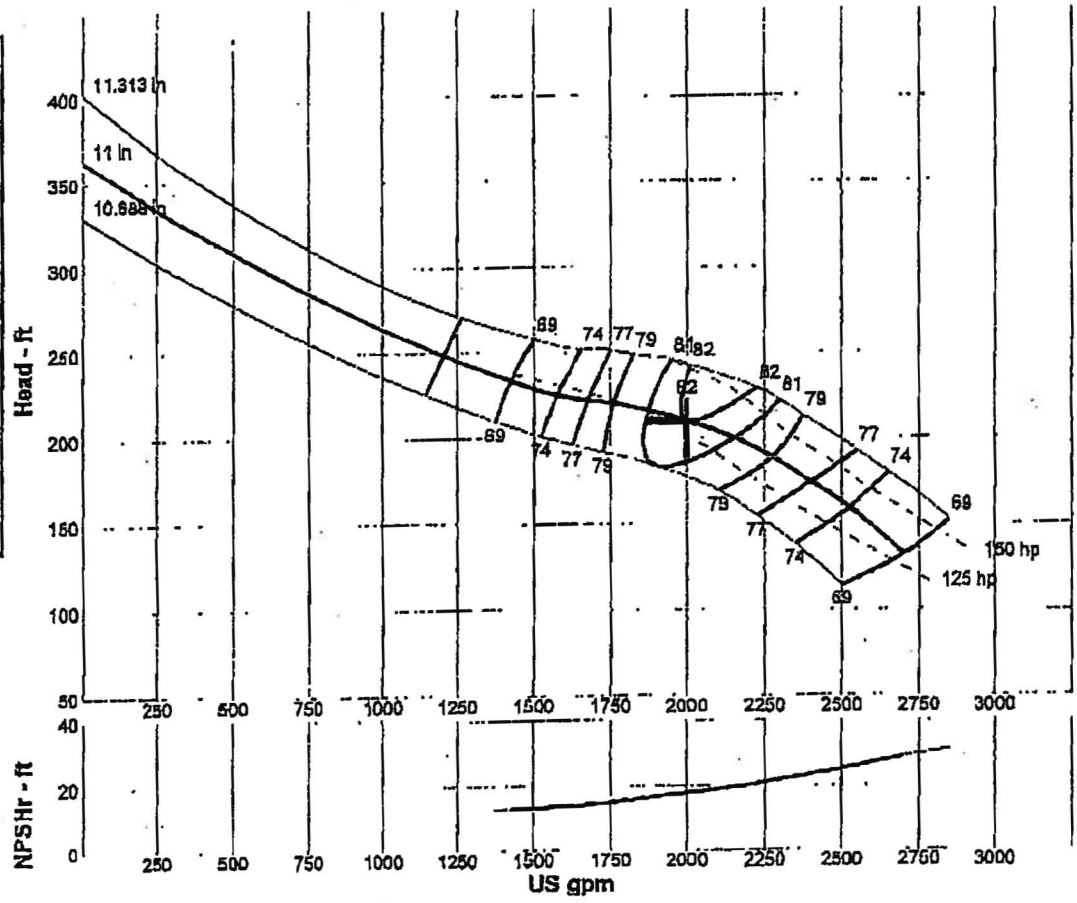

Performance Evaluation:

Flow US gpm	Speed rpm	Head ft	Efficiency %	Power hp	NPSHr ft
2400	1760	174	77	137	23.4
2000	1760	210	82	129	17.9
1600	1760	224	75	121	13.7
1200	1760	254	62	124	11.9
800	1760	—	—	—	—

Selected from catalog: American-Marsh.60 Vers: 2007a

VERTICAL TURBINE PUMP

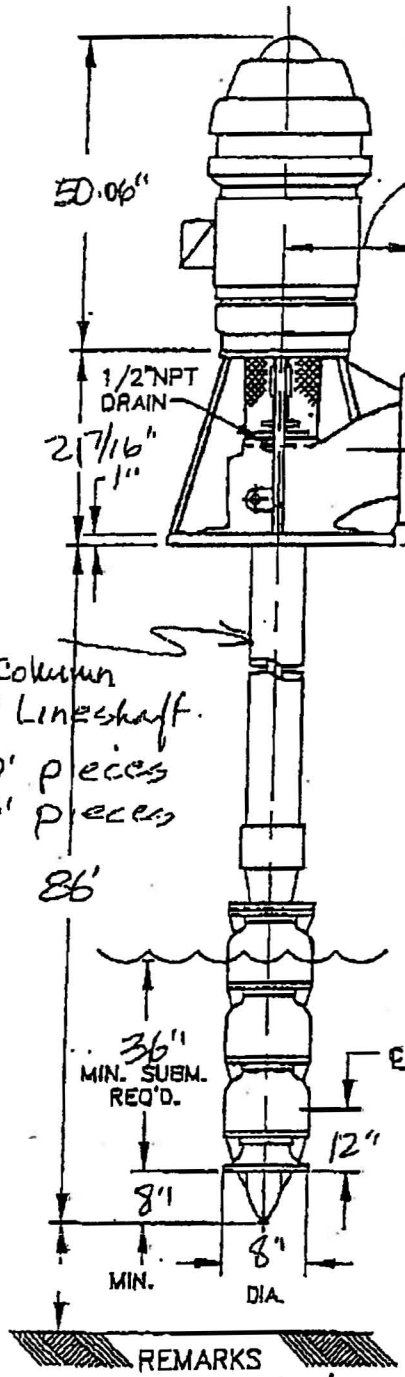

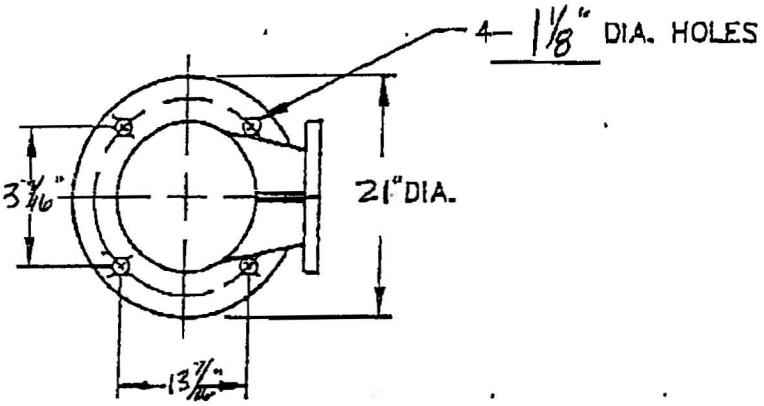

DISCHARGE

10" 125# ANSI-F.F. FLG.
(12) 7/8" DIA. HOLES *
14 1/4" DIA. BOLT CIRCLE
16" DIA. FLANGE
* BOLT HOLES STRADDLE VERTICAL ℄

MOTOR

MAKE US Motors
ENCLOSURE WP-1
TYPE VHS NRR Yes
HP 150 RPM 1800
PHASE 3 HERTZ 60
VOLTAGE 3ph/60cy/460V
FRAME NO. 444JP
TYPE COUPLING NRR

PUMP

10" "A" C.I. DISCH HD
1 1/2" LINE SHAFT 10" COL
— SHAFT TUBE
PROD.LUBE X OIL LUBE
TYPE 14MC STAGE 3
2000 GPM 210 TDH
IMPELLER Closed
STRAINER Cone

MATERIAL

COL PIPE Steel
LINE SHAFT 416 SS
SHAFT TUBE —
BOWL SHAFT 416SS
SHAFT PACKING graphite
SOLE PLATE Steel
BEARING RETAINER Bronze

PUMP BOWL Cast iron
IMPELLER bronze
BEARINGS(BOWL) bronze
BEARINGS(LINESHAFT) rubber
STRAINER galvanized
BOWL W/R —
IMPELLER W/R —

REMARKS
NO. UNITS REQ'D. 1

FLUID WATER
SPEC. GRAVITY 1.0
VISCOSITY —
TEMPERATURE 60°F
PH —

CUSTOMER Ferguson Water
Nampa, Idaho
ORDER NO.
SUPPLIER
DWG. NO.
SERIAL NO.

NOT TO BE USED FOR CONSTRUCTION

Standard Duty - High Profile Discharge Heads and Foundation Plates

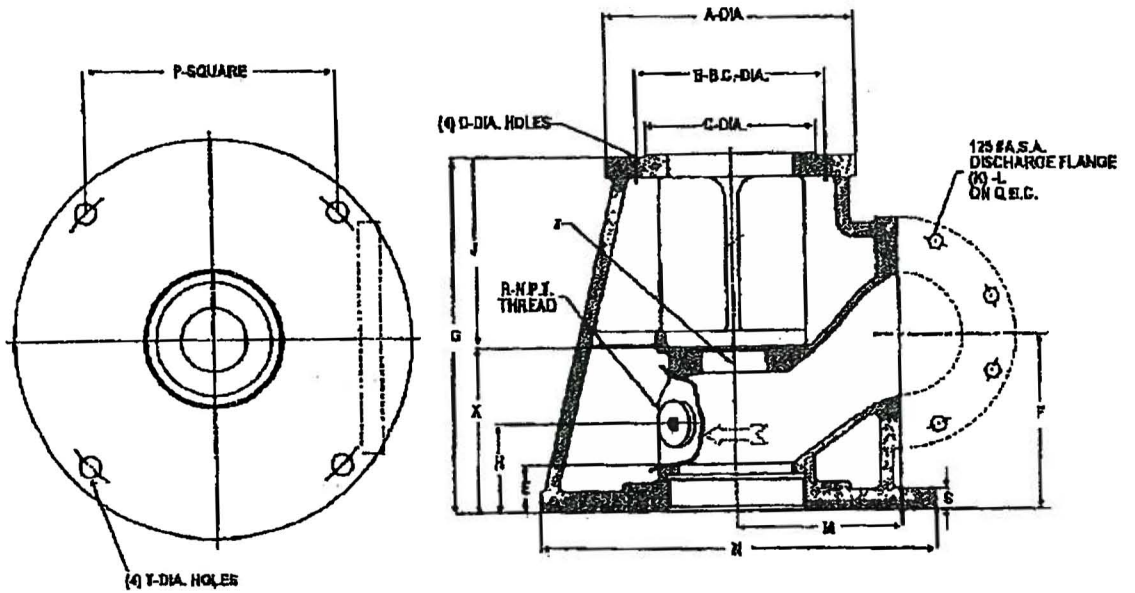

Discharge Head Model	Size	Column Inner	Column Outer	A	B	C	D	E	F	G	H	J	K	L	M	N	P	Q	R	S	T	X	Z
TR4A	4	2	4	10	9-1/8	8-1/4	7/16	1-5/8	8-3/4	15-7/8	3-7/8	9	8	5/8 Tap	8-3/4	16	10-5/64	7-1/2	3/4	1-1/8	1	6-7/8	3-1/8
TR6B	6	2	6	12	9-1/8	8-1/4	7/16	1-3/4	8-3/8	16-7/8	4-1/8	9-1/8	8	½ Tap	7-7/8	19	12-1/64	9-1/2	3/4	1	1	7-3/4	3-1/8
TR6C	6	2	6	16-1/2	14-3/4	13-1/2	11/16	1-3/4	8-3/8	16-7/8	4-1/8	8-1/8	8	½ Tap	7-7/8	19	12-1/64	9-1/2	3/4	1	1	7-3/4	3-3/4
TR8C	8	2-1/2	8	16-1/2	14-3/4	13-1/2	11/16	2	10-11/1	20-7/16	3-7/8	12	8	½ Tap	10	21	13-17/16	11-3/4	3/4	1	1-1/8	8-7/16	3-3/4
TR10C	10	2-1/2	10	16-1/2	14-3/4	13-1/2	11/16	2-1/2	10-11/1	21-7/16	4-5/16	10-7/8	12	7/8 Tap	10	21	13-17/16	14-1/4	3/4	1	1-1/8	10-9/16	3-3/4
TR10HD	10	3-1/2	10	20	14-3/4	13-1/2	11/16	2-1/2	11-15/1	22-3/8	4-7/8	11	12	7/8 Tap	10	23-1/2	15-1/32	14-3/4	3/4	1-11/16	1-1/8	11-3/8	5
TR12HD	12	3-1/2	12	20	14-3/4	13-1/2	11/16	2-1/2	11-15/1	23	5-1/16	11	12	7/8 Tap	14	25	16-3/32	17	3/4	2-3/16	1-1/4	12	5

FOUNDATION STEEL PLATES (Standard Duty – Profile Discharge heads)							
Use with Discharge Head Model	Approx. Shipping Weight	Dimensions (in inches)					
		A	TH	D	B	F	C
TR4A	130	24	1	10-1/2	12	1-1/8	12
TR6B	130	24	1	10-1/2	12	1-1/8	12
TR6C	130	24	1	10-1/2	12	1-1/8	21
TR8C	105	24	1	10-1/2	12	1-1/8	19
TR10C	105	24	1	10-1/2	12	1-1/8	16
TR10HD	165	26	1-1/4	11-1/2	13	1-1/4	18
TR12HD	180	26	1-1/4	12-1/2	14	1-1/4	18-1/2

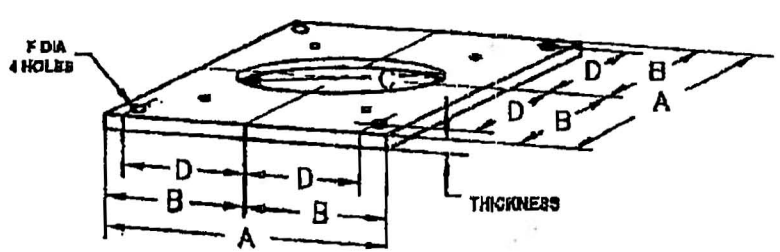

SOLEPLATES

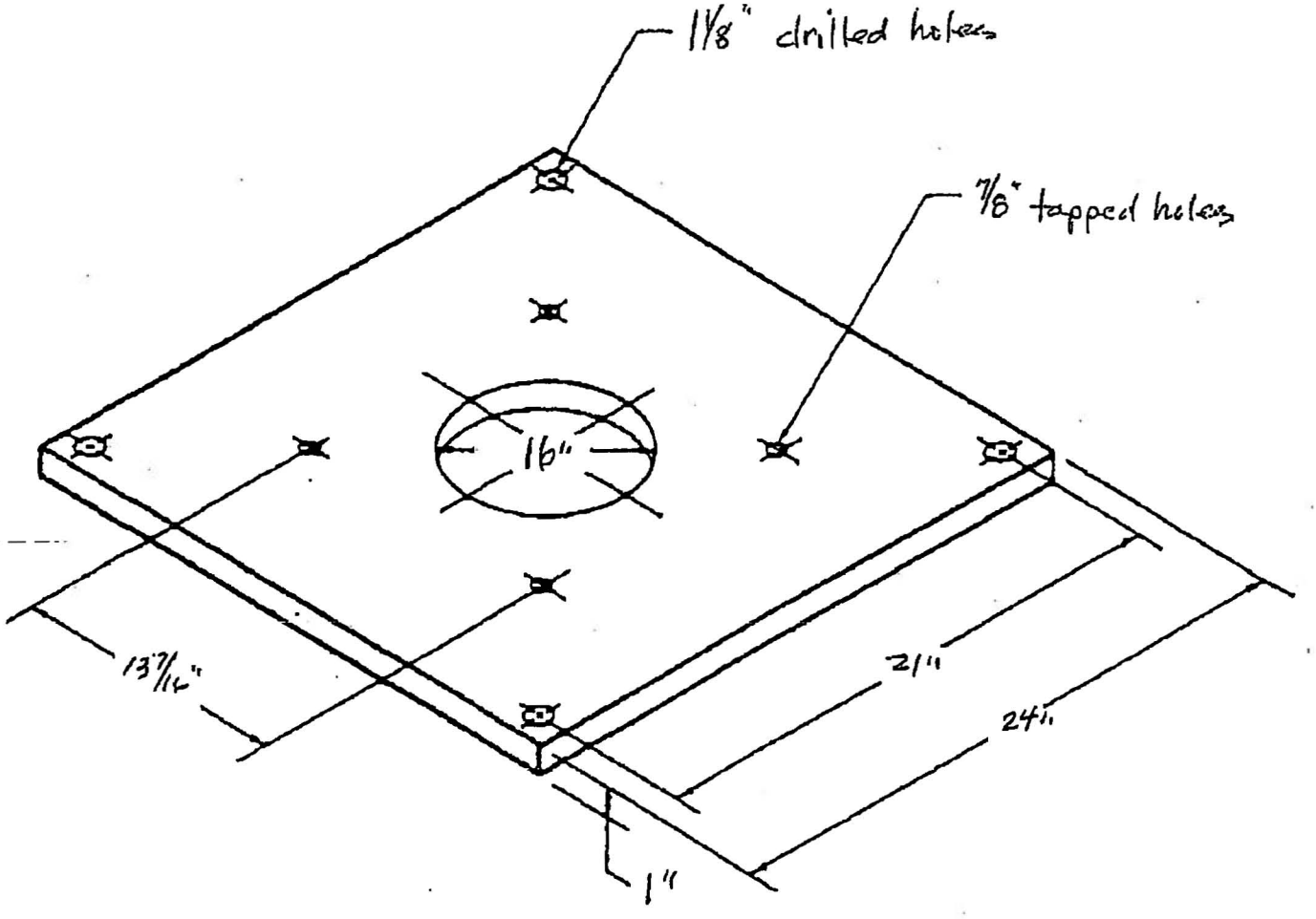

TURBINE BOWL DIMENSIONS
12 TO 16 INCH

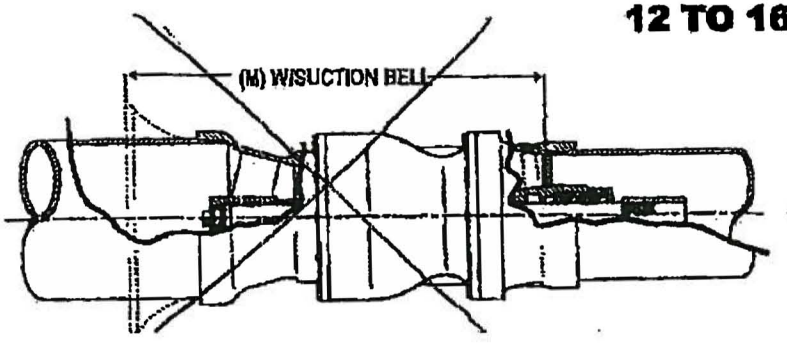

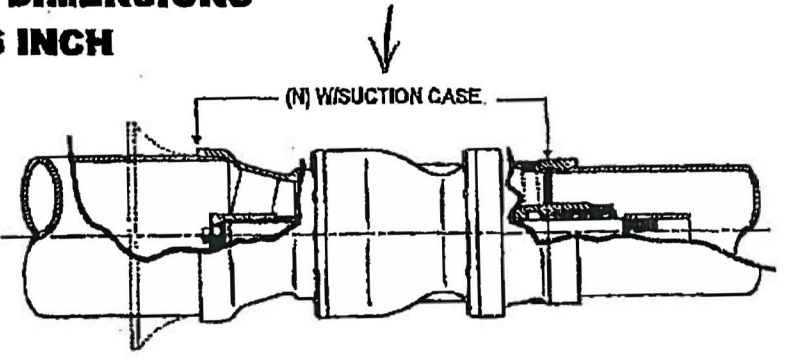

Bowl Size	Bowl Model	All Dimensions in Inches																Extra Add Stage Length	Suction Diameter		Disc. Column Pipe Diameter
		Number Of Bowls																			
		(M) BOWL ASSEMLBY LENGTH WITH SUCTION BELL								(N) BOWL ASSEMLBY LENGTH WITH SUCTION CASE									Bell	Pipe	
		1	2	3	4	5	6	7	8	1	2	3	4	5	6	7	8				
12	12J	25-5/8	34-5/8	44-5/16	52-5/8	61-5/8	70-5/8	79-5/8	88-5/8	21-7/8	30-7/8	39-7/8	48-7/8	57-7/8	66-7/8	75-7/8	84-7/8	9	6	8	6
		26-5/16	35-5/16	44-5/16	53-5/16	62-5/16	71-5/16	80-5/16	89-5/16	21-7/8	30-7/8	39-7/8	48-7/8	57-7/8	66-7/8	75-7/8	84-7/8	9	8	8	8
	12L,K	27-5/16	37-5/16	47-5/16	57-5/16	67-5/16	77-5/16	87-5/16	97-5/16	22-5/8	32-7/8	42-7/8	52-7/8	62-7/8	72-7/8	82-7/5	92-7/8	10"	11-1/4	8	6, 8
		28-5/8	38-5/8	48-5/8	58-5/8	68-5/8	78-5/8	88-5/8	98-5/8	23-3/4	33-3/4	43-3/4	53-3/4	63-3/4	73-3/4	83-3/4	93-3/4	10"	13-1/4	10	10
	12L,M,H	27-13/16	38-5/16	48-13/16	59-5/16	69-13/16	80-5/16	90-13/16	101-5/16	23-3/8	33-7/8	44-3/8	54-7/8	65-3/8	75-7/8	86-3/8	96-7/8	10-1/2	8	8	8
		29-1/8	39-5/8	50-1/8	60-5/8	71-1/8	81-5/8	92-1/8	102-5/8	24-1/4	34-3/4	42-1/4	55-3/4	66-1/4	76-3/4	87-1/4	97-3/4	10-1/2	10	10	10
	12H	28-9/16	39-13/16	51-1/16	62-5/16	73-9/16	84-13/16	96-1/16	107-5/16	24-1/8	35-3/8	46-5/8	57-7/8	69-1/8	80-3/8	91-5/8	102-7/8	11-1/4	8	8	8
		29-7/8	41-1/8	52-3/8	63-5/8	74-7/8	86-1/8	97-3/8	108-5/8	25	36-1/4	47-1/2	58-3/4	70	81-1/4	92-1/2	103-3/4	11-1/4	10	10	10
	12V	29-1/16	40-13/16	52-9/16	64-5/16	76-1/16	87-13/16	99-9/16	111-5/16	24-5/8	36-3/8	48-1/2	59-7/8	71-5/8	83-3/8	95-1/8	106-7/8	11-3/4	8	8	8
		30-3/8	42-1/8	53-7/8	65-5/8	77-3/8	89-1/8	100-7/8	112-5/8	25-1/2	37-1/4	49	60-3/4	72-1/2	84-1/4	96	107-3/4	11-3/4	10	10	10
14	14 M	32-5/16	44-13/16	57-5/16	69-13/16	82-5/16	94-13/16	107-5/16	119-13/1	27-7/16	39-15/16	52-7/16	64-15/16	77-7/16	89-15/16	102-7/16	114-15/1	12-1/2	8	8	8
		35-1/16	47-9/16	60-1/16	72-9/16	85-1/16	97-9/16	110-1/16	122-9/16	28-3/16	40-11/16	53-3/16	65-11/16	78-3/16	90-11/16	103-3/16	115-11/1	12-1/2	10	10	10
	14V	33-1/16	46-5/16	59-9/16	72-13/16	86-1/16	99-5/16	112-9/16	125-13/1	28-3/16	41-7/16	54-11/16	67-15/16	81-3/16	94-7/16	107-11/1	120-15/1	13-1/4	10	10	10
		35-13/16	49-1/16	62-5/16	75-9/16	88-13/16	102-1/16	115-5/16	128-916	29-15/16	43-3/16	56-7/16	69-11/16	81-15/16	95-3/16	108-716	121-11/1	13-1/4	12	12	12
16	16K	35-1/16	50-5/16	65-9/16	80-13/16	96-1/16	111-5/16	126-9/16	141-13/1	33-3/16	45-7/16	60-11/16	75-15/16	91-3/16	106-7/16	121-11/1	136-15/1	15-1/4	10	10	10
		37-13/16	53-1/16	68-5/16	83-9/16	98-13/16	114-1/16	129-5/16	144-9/16	30-15/16	46-3/16	61-7/16	76-11/16	91-15/16	107-3/16	122-7/16	137-11/1	15-1/4	12	12	12

NOTE: Dimensions are subject to change without notice.

SECTIONAL DRAWING

SLEEVE TYPE
OPEN LINE SHAFT COLUMN

DWG. NO.: _____
DATE: _____

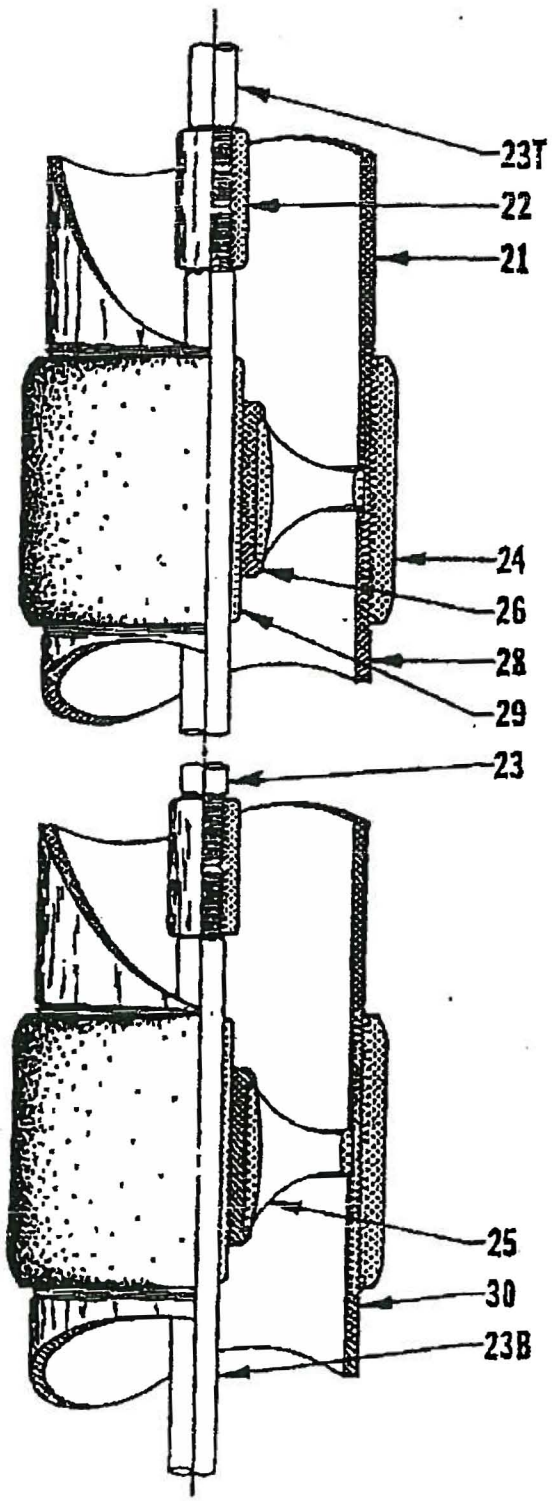

ITEM NO.	PART NAME	MATERIAL STD.	MATERIAL OPTIONAL
518	COLUMN ASSY.	———	
21	TOP PC. COL. PIPE	STEEL	
22	LINE SHAFT COUPLING	STEEL	
23	LINE SHAFT	STEEL	
23B	BOT. PC. LINE SHAFT	STEEL	
23T	TOP PC. LINE SHAFT	STEEL	
24	COL. COUPLING	DUCTILE CI	
25	SPIDER	BRONZE	
26	BEARING, LINE SHAFT	RUBBER	
28	COLUMN PIPE	STEEL	
29	SHAFT SLEEVE	304 SS	
30	BOT. PC. COL. PIPE	STEEL	

PRINTED IN U.S.A.

SHAFT
~~OIL LUBE &~~ PRODUCT LUBE TYPE
FOR LINESHAFT TURBINE PUMPS

SHAFT/C-1045 TBE OIL LUBE TYPE

SIZE	WEIGHT		
	5 FT.	10 FT.	20 FT.
1"	14	27	54
1-3/16"	19	38	76
1-1/4"	21	42	84
1-1/2"	30	60	120
1-11/16"	38	76	152
1-15/16"	50	100	200
2-3/16"	64	128	256

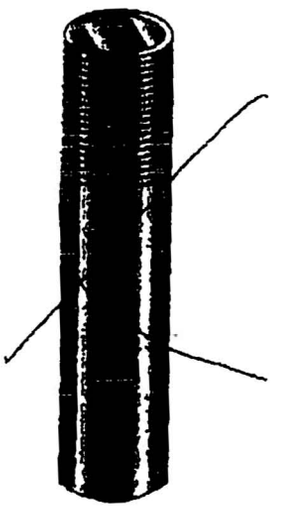

TYPICAL:
SHAFT - TBE C1045
CARBON STEEL

~~SHAFT/C-1045 TBE PRODUCT LUBE TYPE~~
&
SHAFT/416 S.S. TBE PRODUCT LUBE TYPE

SIZE	WEIGHT		
	5 FT.	10 FT.	SLEEVE O.D. - IN.
1"	15	28	1.25
1-3/16"	19.5	38.5	1.50
1-1/4"	21.5	42.5	1.375
1-1/2"	31	61	1.6875
1-11/16"	39	77	1.9375
1-15/16"	51	101	2.1875
2-3/16"	65	129	2.4375

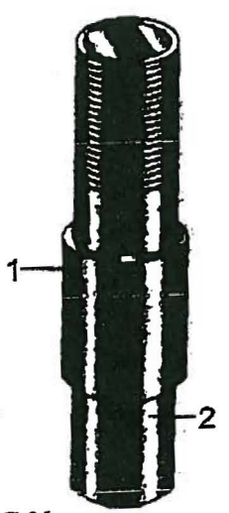

TYPICAL:
1. 304 S.S. SLEEVE
2. SHAFT - TBE C1045
CARBON STEEL

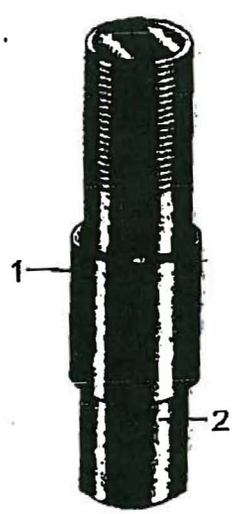

TYPICAL:
1. 304 S.S. SLEEVE
2. SHAFT - TBE 416
STAINLESS STEEL

SHAFT COUPLINGS

SIZE	WEIGHT			O.D.
	CARBON	416 S.S.	304 S.S.	
1"	0.50	0.50	0.50	1.38
1-3/16"	0.75	0.75	0.75	1.62
1-1/4"	1.00	1.00	1.00	1.62
1-1/2"	1.75	1.75	1.75	2.06
1-11/16"	2.00	2.00	2.00	2.13
1-15/16"	4.25	4.25	4.25	2.63
2-3/16"	6.10	6.10	6.10	2.75

TYPICAL SHAFT COUPLING
1215 STEEL

BRONZE LINESHAFT BEARINGS

TUBE AND SHAFT SIZE	WEIGHT.
1" X 1-1/2"	1.00
1-3/16" X 2"	2.00
1-1/4" X 2"	2.00
1-1/2" X 2-1/2"	4.00
1-11/16" X 2-1/2"	3.75
1-15/16" X 3"	6.00
2-3/16" X 3-1/2"	8.50

TYPICAL LINESHAFT BEARING
C93200 BRONZE

TUBE COUPLING
REDWOOD TYPE

TUBE SIZE	WEIGHT.	O.D.
1-1/2"	1.25	2.25
2"	1.75	2.75
2-1/2"	2.50	3.25

TYPICAL REDWOOD COUPLING
C-1018 STEEL

COLUMN PIPE COUPLING
8 TPI - R.H.

PIPE SIZE	WEIGHT.
4"	4
5"	9
6"	10
8"	17
10"	31
12"	45

TYPICAL COLUMN PIPE COUPLING
DUCTILE IRON

COLUMN ASSEMBLY

DIMENSIONS
THREE PHASE HOLLOSHAFT® MOTORS
WEATHER PROTECTED TYPE I
FRAME H444 THRU H445

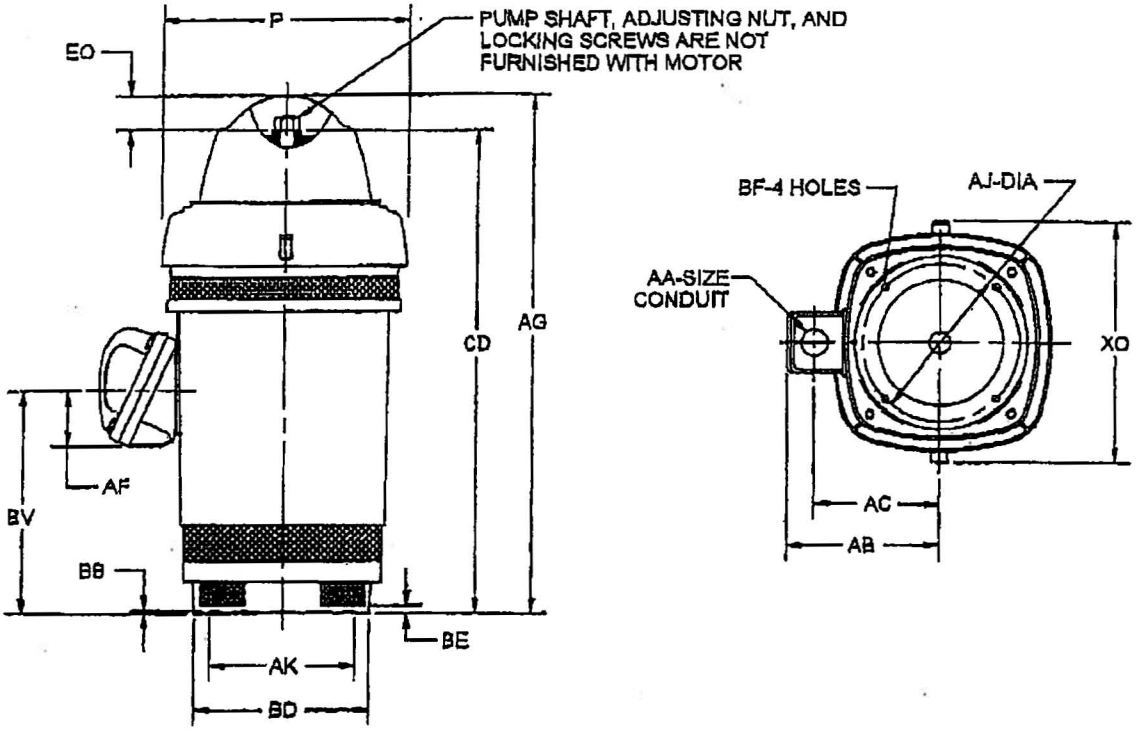

ALL DIMENSIONS ARE IN INCHES AND MILLIMETERS

	UNITS	P [2]	AG	AJ	AK +.005	BB MIN	BE	BF	BV	CD	EO	XO
X	IN	23.38	50.06	14.750	13.500	.25	.75	.69	21.19	44.75	5.13	27.50
	MM	594	1272	374.65	342.90	6	19	16	538	1137	130	699

	CONDUIT BOX MATERIAL	UNITS	AA	AB	AC	AF
	STEEL	IN	3.00	18.94	14.44	4.72
		MM		481	367	120
X	CAST IRON	IN	3-1/2 NPT	18.56	14.31	5.28
		MM		471	363	134

	FRAME	UNITS	BD MAX
X	H444, H445TP	IN	16.00
		MM	419
	H444, H445TPA	IN	20.00
		MM	508

TOLERANCES	
FACE RUNOUT	.007 F.I.R.
PERMISSIBLE ECCENTRICITY OF MOUNTING RABBET	.007 F.I.R.

1. ALL ROUGH DIMENSIONS MAY VARY BY .25" DUE TO CASTING AND/OR FABRICATION VARIATIONS.
2. LARGEST MOTOR WIDTH.
3. CONDUIT OPENINGS MAY BE LOCATED IN STEPS OF 90 DEGREES REGARDLESS OF LOCATION. STANDARD AS SHOWN WITH CONDUIT OPENING DOWN.
4. TOLERANCES SHOWN ARE IN INCHES ONLY.

VERTICAL HOLLOSHAFT® HIGH THRUST - "P" BASE
THREE PHASE, WEATHER PROTECTED TYPE I (WPI)
PREMIUM EFFICIENT AND PREMIUM EFFICIENT / INVERTER DUTY

VHS
WPI
PRE EFF
VFD Duty

APPLICATIONS:

For use on Turbine, Mix Flow and Propeller Pumps

FEATURES:

- Class F Insulation, Class B Rise at Full Load (Sine Wave Power)
- 1.15 Service Factor (Sine Wave Power)
- Maximum 40 Deg C. Ambient, 3,300 Feet Altitude
- 230/460 Volt Motors Suitable for 230 Volt Part Winding Start
- 30 HP & Below Can Be Rerated For 209/415 Volt 50 Hertz Operation at 1.0 Service Factor
- Inverter Duty Per NEMA MG-1 Part 31 At 1.0 Service Factor
- 115 Volt Space Heater (through 250HP)
- Corrosion Resistant Mill & Chemical Duty Paint
- Premium Efficient Design, Special Balance
- NRR = Non-Reverse Ratchet, SRC = Self-Release Coupling

HP	RPM	FRAME	VOLTS	CATALOG NUMBER	TYPE	LIST $ w/NRR	LIST $ w/SRC	%F.L. EFF	DOWN THRUST (LBS)	BASE DIA (IN)	CPLG HEIGHT (IN)	CPLG BX (IN)	CPLG KEY SIZE	SHIP WGT (LBS)	NOTES
15	1800	254TP	230/460	HO15V2BLE	AUI	$1,881	$1,741	91.7	3300	10	23-3/8	1	1/4	265	97
20	1800	256TPH	230/460	HO20V2BLF	AUI	$2,095	$1,935	92.4	3300	12	23-3/8	1	1/4	300	97
25	1800	284TPA	230/460	HO25V2BLF	AUI	$2,388	$2,210	92.4	3300	12	24-3/4	1	1/4	305	97
30	1800	286TPA	230/460	HO30V2BLF	AUI	$2,630	$2,432	92.4	3300	12	24-3/4	1	1/4	325	97
40	1800	324TPH	230/460	HO40V2BLF	RUSI	$3,314	$3,108	94.1	5700	12	28-7/32	1-1/4	1/4	635	97
50	1800	326TP	230/460	HO50V2BLG	RUSI	$3,789	$3,543	94.5	5700	16-1/2	28-7/32	1-1/4	1/4	675	97
60	1800	364TP	460	HO60V2SLG	RUSI	$4,485	$4,203	94.5	5700	16-1/2	31-5/32	1-1/4	1/4	730	97
75	1800	365TP	460	HO75V2SLG	RUSI	$5,245	$4,901	95.0	5700	16-1/2	31-5/32	1-1/4	1/4	800	97
100	1800	404TP	460	HO100V2SLG	RUSI	$6,767	$6,333	95.4	6700	16-1/2	36-15/16	1-1/2	3/8	1110	97
125	1800	405TP	460	HO125V2SLG	RUSI	$7,885	$7,359	95.4	6700	16-1/2	36-15/16	1-1/2	3/8	1200	97
150	1800	H444TP	460	HO150V2SLG	RUSI	$10,804	$10,250	96.2	9800	16-1/2	44-25/32	1-11/16	3/8	1500	97
200	1800	H445TPA	460	HO200V2SLH	RUSI	$13,425	$12,672	96.2	9800	20	44-25/32	1-11/16	3/8	1600	97
250	1800	H445TPA	460	HO250V2SLH	RUSI	$16,784	$16,216	95.8	9800	20	44-25/32	1-11/16	3/8	1600	97
300	1800	447TPA	460	HO300V2SLH	RUSI	$19,470	$18,939	95.8	9800	20	49-25/32	1-11/16	3/8	2200	51,97
350	1800	447TPA	460	HO350V2SLH	RUSI	$21,591	$21,060	95.8	9800	20	49-25/32	1-11/16	3/8	2200	51,97
400	1800	447TPA	460	HO400V2SLH	RUSI	$24,501	$23,970	95.8	9800	20	49-25/32	1-15/16	1/2	2200	51,97
Premium Efficient, Non-Inverter Duty															
450	1800	449TP	460	HO450P2SLJ	HUS	$26,049	$25,505	95.2	9500	24-1/2	49-25/32	1-11/16	3/8	3000	51

NOTE: Alternative Coupling Sizes per Frame Size are listed beginning on Page 32

Most stock VHS Motors include a Non-Reverse Ratchet (NRR), as indicated by their Catalog Number. To order a Motor with a Self-Release Coupling (SRC), add an "N" as the last character in the Catalog Number Example: HO50S2BLG includes NRR, HO50S2BLGN is SRC.

Note 51. Equipped With Winding Thermostat

Note 97: Inverter Duty with Inverter Grade® Insulation

Discount Symbol: DS-7VS

OPERATING CHARACTERISTICS
VERTICAL HOLLOSHAFT® HIGH THRUST - "P" BASE
THREE PHASE, WEATHER PROTECTED TYPE I (WPI)
PREMIUM EFFICIENT AND PREMIUM EFFICIENT / INVERTER DUTY

Perf Data
VHS
WPI
PRE EFF

HP	RPM		% Efficiency			% Power Factor			Current (Amps 460 Volts		Torque at Full Voltage (ft/lbs)			NEMA Code
											Full Load Torque @ Full Load Speed	Locked (Starting)	Pullout Breakdow	
	No Load	Full Load	Full Load	3/4 Load	1/2 Load	Full Load	3/4 Load	1/2 Load	Full Load	Locked Starting		% of Full Load		
15	1800	1770	91.7	92.4	92	83.4	80.5	72.8	18.4	108	44.5	227	240	G
20	1800	1770	92.4	93.3	93.3	85.4	84	78.6	23.7	136	59.4	222	223	G
25	1800	1765	92.4	93.5	93.5	84.6	82.7	76.5	30	173	74.3	230	230	G
30	1800	1770	92.4	93.8	93.9	84.5	82.8	76.8	36	201	89.1	224	222	G
40	1800	1780	94.1	94.4	93.6	87.8	86.4	81.3	45	286	117.9	192	251	G
50	1800	1780	94.5	94.6	94.1	87.7	86.2	80.9	56	358	147.5	192	252	G
60	1800	1785	94.5	95.2	94.8	87.2	85.9	80.9	68	434	176.7	200	237	G
75	1800	1780	95	95.3	95.1	85.3	82.9	75.8	87	539	221.1	200	247	G
100	1800	1785	95.4	95.5	95.1	86.3	84.5	78.4	114	737.5	294.3	185	230	G
125	1800	1785	95.4	95.8	95.3	86.4	85.2	79.7	142	924.1	368.1	186	230	G
150	1800	1785	96.2	96.1	95.6	86.3	83.9	77.1	169	1072.2	441.5	174	235	G
200	1800	1785	96.2	96.2	95.8	85.4	82.4	74.6	228	1484.2	588.9	186	244	G
250	1800	1780	95.8	96	95.6	83.9	80.4	71.8	292	1794.3	737.1	183	235	G
300	1800	1785	95.8	96.2	96	88.8	88.1	84.4	331	2200	883.1	80	175	G
350	1800	1785	95.8	96.5	96.5	87.9	87.2	83.2	369	2550	1031.2	80	175	G
400	1800	1780	95.8	96.3	96.2	86.5	86	79.5	452	2900	1179	80	175	G
450	1800	1785	96.2	96.7	96.7	90	89.7	86.8	487	3269.3	1323.9	100	175	G

Efficiency and power factor values listed above are typical values. For guaranteed and certified values, refer to the Technical Service Group

The code letter is an indication of the locked rotor K.V.A. in accordance with the National Electrical Code.

When performance values have been quoted, they should be shown on the order.

Data subject to change without notice

General Information
U.S. Motors on Variable Frequency Drives (VFD) ®

PRODUCT OVERVIEW

U.S. Motors Inverter Duty Motors with INVERTER GRADE® insulation exceeded NEMA MG-1 Part 30 and 31 before the standards were established. We were a leader in the development of motors to withstand PWM drives evolution from power transistors to higher switching frequency IGBT's. Today there is an increased need for motors for light and medium duty inverter applications. Through continued research and development, including the addition of INVERTER GRADE® wire, all three phase vertical motors are inverter compatible. Inverter compatibility of motors is complex. Many factors must be taken into account to determine the suitability of types of motors. These factors include torque requirements (constant or variable), speed range, line/system voltage, cable length between drive and motor, drive switching (carrier) frequency and the motor construction. Wider speed ranges, higher voltages, higher switching frequencies and increased cable lengths all add to the severity of the application and therefore the potential for premature motor failure. U.S. Motors has differentiated its products into families for your ease of selection for various inverter applications.

Applying Inverter Duty motors with INVERTER GRADE® Insulation on Variable Frequency Drives:

The products in this catalog labeled "Inverter Duty" have INVERTER GRADE® insulation. This insulation system exceeds the NEMA MG-1 Part 31 standard and has been proved in thousands of inverter installations for reliability. Emerson provides a minimum 3-year warranty on all motors that include INVERTER GRADE® insulation and does not limit cable run between the motor and the VFD for these motors. These are the most appropriate motors for any severe inverter application or when the factors affecting a motor's suitability are undefined (such as spares). Inverter Duty Motors type RUSI are good for 10:1 Variable Torque.

Applying motors without INVERTER GRADE® insulation on Variable Frequency Drives:

Motors without INVERTER GRADE® insulation may be utilized on VFD Power subject to the following limitations:

Applying Premium Efficient Motors on Variable Frequency Drives:

Meet NEMA MG-1, Section IV, Part 31.4.4.2. They are suitable for use with adjustable frequency drives under the following parameters: Up to 10:1 speed range on variable torque loads, standard two year warranty.

Maximum Cable Distance VFD to Motor, Premium Efficiency			
Switching Frequency	460 Volt	230 Volt	380 Volt
3 Khz	196 ft	481 ft	295 ft
6 Khz	168 ft	340 ft	209 ft
9 Khz	113 ft	278 ft	170 ft
12 Khz	96 ft	241 ft	148 ft
15 Khz	86 ft	215 ft	132 ft
20 Khz	76 ft	186 ft	114 ft

Applying Standard & Energy Efficient Motors on Variable Frequency Drives:

Meet NEMA MG-1, Section IV, Part 30.2.2.8. They are suitable for use with adjustable frequency drives under the following parameters: Up to 10:1 speed range on variable torque loads, one year warranty.

Maximum Cable Distance VFD to Motor, Standard or Energy Efficient			
Switching Frequency	460 Volt	230 Volt	380 Volt
3 Khz	103 ft	435 ft	218 ft
6 Khz	73 ft	307 ft	164 ft
9 Khz	59 ft	251 ft	126 ft
12 Khz	51 ft	217 ft	109 ft
15 Khz	46 ft	194 ft	98 ft
20 Khz	40 ft	168 ft	85 ft

All Motors have 40C Ambient, 1.0 SF on Inverter Power, 3300 Ft. Max Altitude, 460 Voltage or less line power, up to 10:1 Speed Range on Variable Torque and have Class F Insulation.

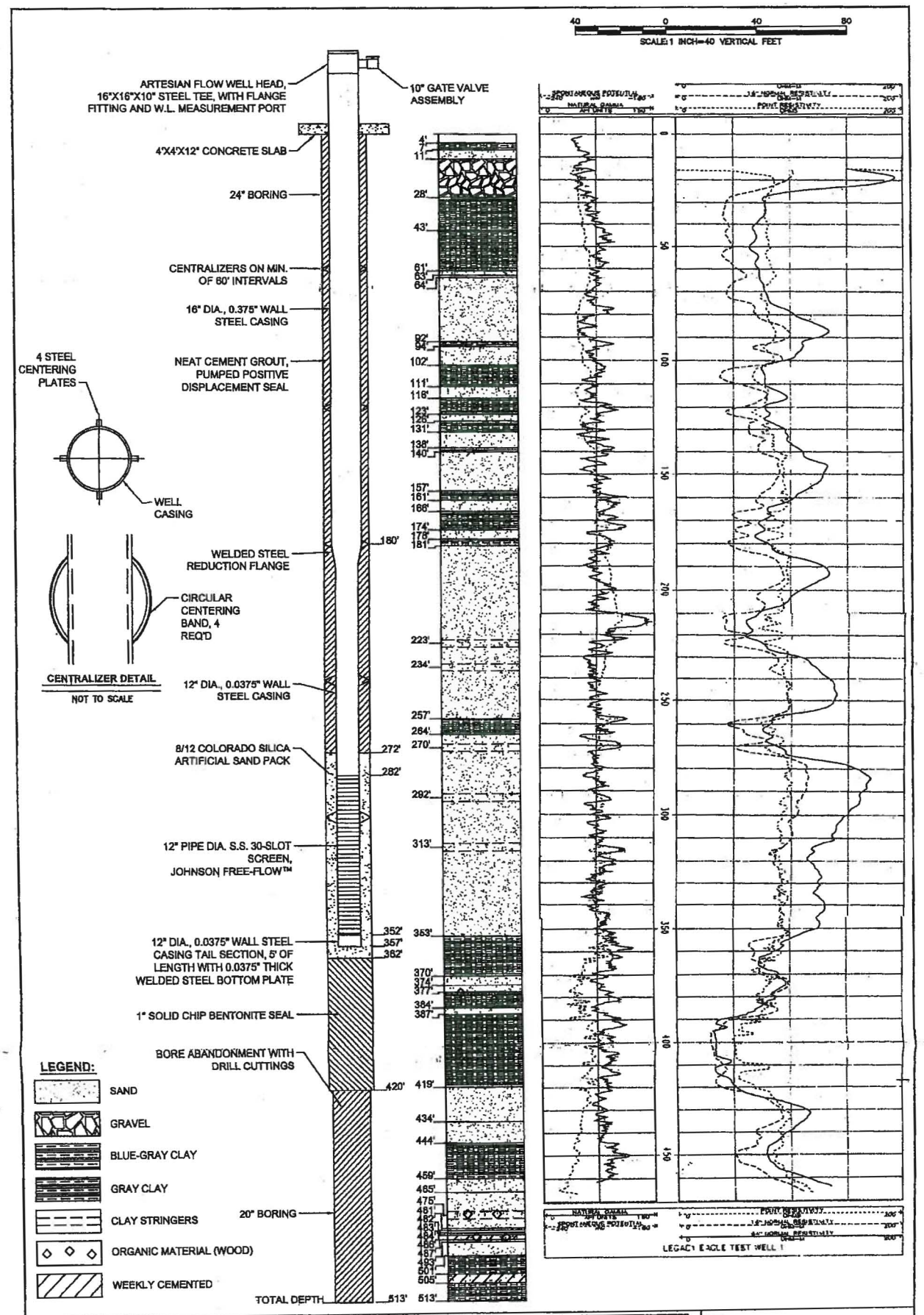

AS-BUILT 2-17-06
EAGLE TEST WELL NO. 1
CITY OF EAGLE, IDAHO

HOLLADAY ENGINEERING CO.
ENGINEERS · CONSULTANTS
32 N. MAIN P.O. BOX 235 PAYETTE, ID 83661
(208) 642-3304 · FAX# (208) 642-3530
EMAIL: hec@holladayengineering.com

CHD
WCM
3/13/06
2/10/06
JOB NO. EG 061204
DWG FILE

LEGACY

Form 238-7
6/02

IDAHO DEPARTMENT OF WATER RESOURCES
WELL DRILLER'S REPORT

Office Use Only
Well ID No.
Inspected by
Twp ____ Rge ____ Sec ____
____ 1/4 ____ 1/4 ____ 1/4
Lat: : : Long: : :

1. WELL TAG NO. D 0041980
DRILLING PERMIT NO. 890994 - 835987
Water Right or Injection Well No. 63-32089, 63-32090

2. OWNER:
Name CITY OF EAGLE
Address P.O. BOX 1520
City EAGLE State ID Zip 83616

3. LOCATION OF WELL by legal description: LEGACY WELL #2
You must provide address or Lot, Blk, Sub. or Directions to well.
Twp. 4 North ☒ or South ☐
Rge. 1 East ☐ or West ☒
Sec. 11 ____ 1/4 SE 1/4 NW 1/4
Gov't Lot ____ County ADA
Lat: : : Long: : :
Address of Well Site QUARTER CIRCLE DJ RANCH, WEST OF EAGLE ROAD City EAGLE
Lt. ____ Blk. ____ Sub. Name ____

4. USE:
☐ Domestic ☐ Municipal ☐ Monitor ☐ Irrigation
☐ Thermal ☐ Injection ☒ Other TEST

5. TYPE OF WORK check all that apply (Replacement etc.)
☒ New Well ☐ Modify ☐ Abandonment ☐ Other ____

DRILL METHOD:
☐ Air Rotary ☐ Cable ☐ Mud Rotary ☒ Other REVERSE

7. SEALING PROCEDURES

Seal Material	From	To	Weight / Volume	Seal Placement Method
CEMENT GROUT	0	278	24 gal	PUMPED BOTTOM TO TOP
BENTONITE	360	415	12,000	DRY POUR

Was drive shoe used? ☐ Y ☒ N Shoe Depth(s): ____
Was drive shoe seal tested? ☐ Y ☒ N How? ____

8. CASING/LINER: 16" X 12" REDUCER @ 180' TO 181'

Diameter	From	To	Gauge	Material	Casing	Liner	Welded	Threaded
16	+4	180	.375	STEEL	☒	☐	☒	☐
12	181	282	.375	STEEL	☒	☐	☒	☐
					☐	☐	☐	☐

Length of Headpipe ____ Length of Tailpipe 5'
Packer ☐ Y ☒ N Type ____

9. PERFORATIONS/SCREENS PACKER TYPE
Perforation Method ____
Screen Type & Method of Installation JOHNSON WIRE WRAP

From	To	Slot Size	Number	Diameter	Material	Casing	Liner
282	352	.030		12	S.S.	☒	☐
						☐	☐
						☐	☐

10. FILTER PACK

Filter Material	From	To	Weight / Volume	Placement Method
#8-12 SAND	278	360	24,000	DRY POUR

11. STATIC WATER LEVEL OR ARTESIAN PRESSURE:
____ ft. below ground Artesian pressure 6 lb.
Depth flow encountered ____ ft. Describe access port or control devices:
FLANGED CAP W/ 1 1/4" PIPE PLUG

12. WELL TESTS:
☒ Pump ☐ Bailer ☐ Air ☐ Flowing Artesian

Yield gal./min.	Drawdown	Pumping Level	Time
1300 gpm	149'	135'	4 1/2 hrs

Water Temp. ____ Bottom hole temp. ____
Water Quality test or comments: ____
Depth first Water Encounter ____

13. LITHOLOGIC LOG: (Describe repairs or abandonment)

Bore Dia.	From	To	Remarks: Lithology, Water Quality & Temperature	Water Y	Water N
24	0	4	TOP SOIL		
	4	7	CLAY		
	7	11	SAND		
	11	28	SAND, RIVER GRAVELS		
	28	60	BRN CLAY		
	60	63	SAND		
	63	72	BRN CLAY		
	72	92	SAND		
	92	94	BRN CLAY		
	94	166	SAND W/BRN CLAY STREAKS		
	166	174	CLAY		
	174	178	SAND		
	178	181	CLAY		
	181	183	SAND, CLAY STREAKS		
	183	257	SAND		
	257	264	CLAY		
	264	274	SAND W/CLAY STREAKS		
	274	353	SAND		
	353	360	BLUE CLAY		
20	360	384	BLUE CLAY		
20	384	387	SAND		
	387	419	BLUE-GRAY CLAY		
	419	444	SAND		
	444	459	BLUE-GRAY CLAY		
	459	493	SAND W/ CLAY LAYERS		
	493	501	BLUE-GRAY CLAY		
	501	505	CEMENTED SAND		
	505	513	BLUE-GRAY CLAY		
			NOTE: BORE HOLE ABANDONMENT FROM 415' TO 513' WITH DRILL CUTTINGS		

Completed Depth 357' (Measurable)
Date: Started 1-24-06 Completed 4-17-06

14. DRILLER'S CERTIFICATION
I/We certify that all minimum well construction standards were complied with at the time the rig was removed.

Company Name RIVERSIDE INC Firm No. 333
Principal Driller [signature] Date 5-15-06
and
Driller or Operator II ____ Date ____
Operator I Jeff Hash Date 5-15-06

Principal Driller and Rig Operator Required.
Operator I must have signature of Driller/Operator II.

FORWARD WHITE COPY TO WATER RESOURCES

340A/~~360A~~ Series
Single Stage End Suction Pumps

- Capacities to 4500 G.P.M. (850 M^3/HR)
- Heads to 370 Feet (78 Meters)
- Temperatures to 300°F (149°C)

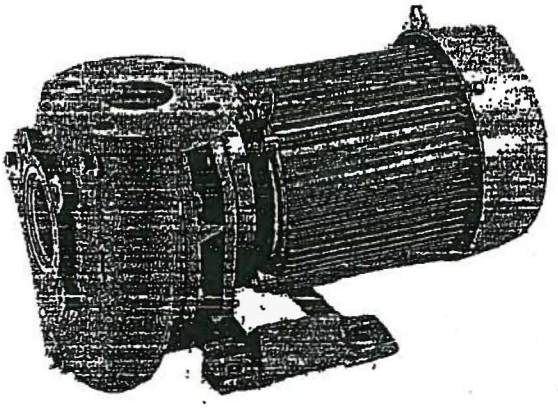

Model 341A

Legacy Well House.
Jockey Pump

☐NO EXCEPTION TAKEN ☑MAKE CORRECTIONS NOTED
☐REJECTED ☐REVISE AND RESUBMIT
☐SUBMIT SPECIFIED ITEM

Checking is only for general conformance with the design concept of the project and general compliance with the information given in the contract documents. Any action shown is subject to the requirements of the plans and specifications. Contractor is responsible for: dimensions which shall be confirmed and correlated at the job site; fabrication processes and techniques of construction; coordination of his work with that of all other trades; and the satisfactory performance of his work.

HOLLADAY ENGINEERING CO.

Date 7/16/07 By [illegible]

submittal lists both a 10hp + 7½hp motor specification calls for a 7½ hp motor.

AURORA®
PENTAIR PUMP GROUP

Barry Cazier
Legacy booster station-Jockey pump

PUMP DATA SHEET
AURORA PUMPS

H2Optimize ver: 6.041
07/05/07

Selection file: (untitled)
Catalog: AURORA60.MPC v 1

Curve: PC116272A

Design Point: Flow: 75 US gpm
Head: 173 ft

Pump: 340/360-ENCL - 3600 **Size:** 1.25x1.5x7
Speed: 3500 rpm Dia: 6.3125 in

Limits: Temperature: 300 °F Sphere size: 0.375 in
Pressure: 175 psi_g Power: — bhp

Specific Speed: Ns: 758 Nss: 4104

Dimensions: Suction: 1.5 in Discharge: 1.25 in

Motor: 10 hp Speed: 3600 Frame: ~~[illegible]~~ 184JM
? 7.5hp? NEMA Standard ODP
sized for Max Power on Design Curve

Fluid: Water Temperature: 60 °F
SG: 1
Viscosity: 1.122 cP
Vapor pressure: 0.2568 psi_a
Atm pressure: 14.7 psi_a

NPSHa: — ft

Piping: System: —
Suction: — in
Discharge: — in

— Data Point —
Flow: 75 US gpm
Head: 176 ft
Eff: 62%
Power: 5.32 bhp
NPSHr: 7.2 ft

— Design Curve —
Shutoff Head: 183 ft
Shutoff dP: 79.3 psi
Min Flow: - US gpm
BEP: 69% eff
@ 1.14 US gpm
NOL Pwr: 8.04 bhp
@ 154 US gpm

— Max Curve —
Max Pwr: 10.2 bhp
@ 166 US gpm

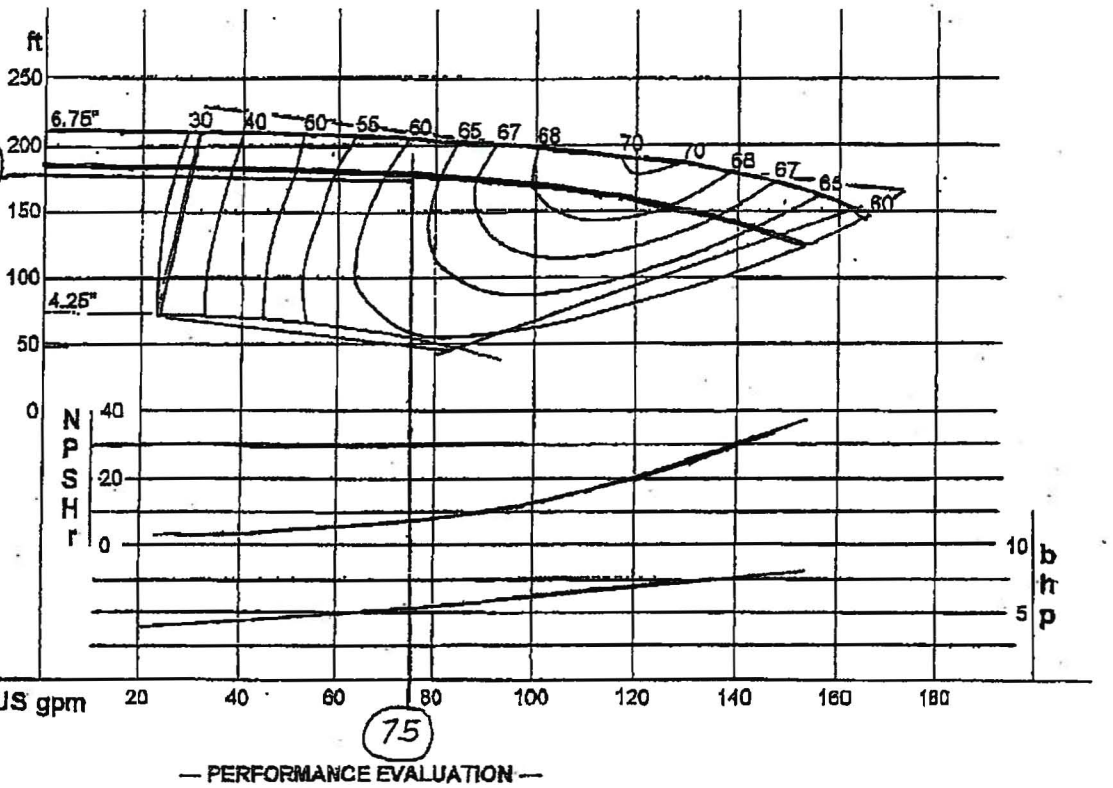

— PERFORMANCE EVALUATION —

Flow US gpm	Speed rpm	Head ft	Pump %eff	Power bhp	NPSHr ft	Motor %eff	Motor kW	Hrs/yr	Cost /kWh
90	3500	171	67	5.79	9.81				
75	3500	176	62	5.32	7.2				
60	3500	179	55	4.89	5.61				
45	3500	181	45	4.5	3.88				
30	3500	182	33	4.18	3.01				

Project Name: Legacy booster station: Jockey pump
Author Name:
Date Created:

AURORA®
PENTAIR PUMP GROUP

Single Stage End Suction-341

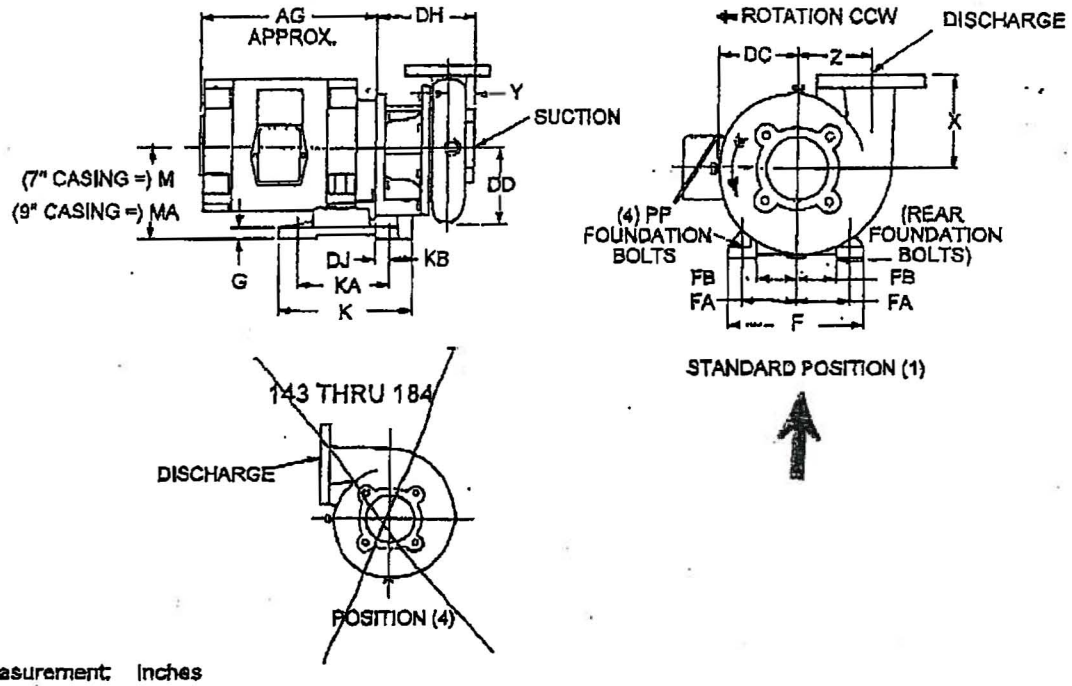

Units of Measurement: Inches

X	Y	Z	DC	DD	DH	DJ	PP	G	K	KA	KB	F	FA	FB	M	MA	AG
6.25	2.44	4.19	4.94	6.19	7.19	0.63	0.5	0.5	8.63	5.5	1.88	9.75	4.13	3.88	5.25	6.25	12.0

Pump Type: 340/360-ENCL	Pump Size: 1-1/4x1-1/2x7
Pump Speed: 3600 RPM	Pump Weight Only: 70.0 lbs
Frame Size: 184JM	Power Frame: N/A
Cover Size:	Frequency: 60 HZ
Coupling: Standard	Pump Flange: 1.5" suction 1.25" discharge
Base Plate: None	Discharge Position: vertical
Enclosure: Open Drip Proof	Rotation: standard
Voltage/Phase: 3 PH 230/460	HorsePower: 7-1/2

Drawing Notes:

1. ALL DIMENSIONS ARE IN INCHES OR METRIC (MILLIMETERS).
2. DIMENSIONS MAY VARY ± 1/4 (6 mm).
3. NOT FOR CONSTRUCTION PURPOSES UNLESS CERTIFIED.
4. CONDUIT BOX IS SHOWN IN APPROXIMATE LOCATION. DIMENSIONS ARE NOT SPECIFIED AS THEY VARY WITH EACH MOTOR MANUFACTURER.
5. CHECK DISCHARGE POSITION. CASING DIMENSIONS WHICH EXCEED 5 1/4 (133.35mm) HEIGHT MAY REQUIRE PADS FOR THE SUPPORT.
6. 2" (51 mm) DISCHARGE AND LARGER PUMPS ARE 125# ANSI FLANGED CONNECTIONS.
7. 1-1/4(IN) DISCHARGE X 1-1/2 (IN) SUCTION AND 7 INCH AND 9

INCH CASE BORE PUMPS WILL BE WITH THREADED CONNECTIONS.

8. INFORMATION CONTAINED HEREIN IS CONFIDENTIAL; IT IS THE PROPERTY OF PENTAIR PUMP GROUP; IT IS TO BE USED SOLELY FOR THE PURPOSE PROVIDED, AND IT IS NOT TO BE DISCLOSED TO OTHERS FOR OTHER PURPOSE WITHOUT THE PRIOR WRITTEN CONSENT OF PENTAIR PUMP GROUP.

Comments:

Motor suitable for 3ph/200v

Material of Construction and Design Details

Material of Construction

Pump Part	Standard Fitted	Bronze Fitted	All-Iron	*All-Bronze
Casing	Cast Iron ASTM A48	Cast Iron ASTM A48	Cast Iron ASTM A48	Bronze ASTM B62
Case Wearing Ring	Bronze ASTM B62	Bronze ASTM B62	Cast Iron ASTM A48	Bronze ASTM B62
Impeller	Cast Iron ASTM A48	Bronze ASTM B584	Cast Iron ASTM A48	Bronze. ASTM B584
Motor Bracket	Cast Iron ASTM A48	Cast Iron ASTM A48	Cast Iron ASTM A48	Cast Iron ASTM A48
Shaft	Steel AISI C1045	Steel AISI C1045	Steel AISI C1045	Steel AISI C1045
Sleeve	Bronze ASTM B62	Bronze ASTM B62	Stainless Steel AISI 316	Bronze ASTM B62
Power Frame (344A & 364A)	Cast Iron ASTM A48	Cast Iron ASTM A48	Cast Iron ASTM A48	Cast Iron ASTM A48
Mechanical Seal 340A Series 360A Series (Optional)	303 stainless steel metal parts, "Buna-N" elastomer parts, Ni-Resist seat and carbon washer			303 stainless steel metal parts, viton elastomer, ceramic seat, and carbon washer
Stuffing Box	Cast Iron ASTM A48	Cast Iron ASTM A48	Cast Iron ASTM A48	Bronze ASTM B62
Packing (Standard) 360A Series Only	Interwoven, graphited fiber diagonally cut			

* All Bronze optionally available in 361A and 364A pumps only.

MODELS 341A-~~342A 361A 362A~~
60 HERTZ MOTOR DATA SHEET
~~1 PHASE: NOT AVAILABLE~~
3 PHASE: 200 (ONLY) OR 230/460 OR 575 VOLTS

JM ~~& JP MOTOR FRAMES~~

HP	RPM	C FLANGE MOTORS HORIZONTAL FOOT MOUNTED 143-184JM ONLY-SUPPORT FOOT MOUNTED ON PUMP O.D.P. - TOTALLY ENC. - EXP. PROOF				MAGNETIC STARTER SIZE REQ'D NEMA 1 ENCLOSURE			APPROXIMATE FULL LOAD AMPS			
		OPEN DRIPPROOF FRAME	SERVICE FACTOR O.D.P.	TEFC & EXP. PROOF FRAME	SERVICE FACTOR TEFC & EXP. PROOF	200V & 230V	460V	575V	200V	230V	460V	575V
1	1750	143	1.15	143	1.0	00	00	00	4.0	3.5	1.8	1.4
	1150	145		145								
1-1/2	3500	143	1.15	143	1.0	00	00	00	5.4	4.7	2.4	1.9
	1750	145		145								
	1150	182		182								
2	3500	145	1.15	145	1.0	0	00	00	6.9	6	3	2.4
	1750	145		145								
	1150	184		184								
3	3500	145	1.15	182	1.0	0	0	0	9.9	8.6	4.3	3.4
	1750	182		182								
	1150	213		213								
5	3500	182	1.15	184	1.0	1	0	0	15.9	13.8	6.9	5.5
	1750	184		184								
	1150	215		215								
7-1/2	3500	184	1.15	213	1.0	1	1	1	24.3	21.1	10.5	8.4
	1750	213		213								
	1150	254		254								
10	3500	213	1.15	215	1.0	2	1	1	31	27	13.5	10.8
	1750	215		215								
	1150	256		256								
15	3500	215	1.15	254	1.0	3	2	2	45	39.2	19.6	15.7
	1750	254		254								
	1150	284		284								
20	3500	254	1.15	256	1.0	3	2	2	58.7	51	25.5	20
	1750	256		256								
	1150	286		286								
25	3500	256	1.15	284	1.0	3	2	2	72.7	63.2	31.6	25
	1750	284		284								
	1150	324		324								
30	3500	284	1.15	286	1.0	4	3	3	97.8	76.7	38.3	31
	1750	286		286								
	1150	326		326								
40	3500	286	1.15	324	1.0	4	3	3	115	100	50	40
	1750	324		324								
50	3500	324	1.15	326	1.0	5	3	3	141	123	61.5	49
	1750	326		326								
60	3500	326	1.15	N/A	1.0	5	4	4	163	142	71	57

NOTES:
1. APPROXIMATE FULL LOAD AMPS BASED ON AVERAGES FOR AURORA STANDARD O.D.P. MOTORS.
2. MAGNETIC STARTER SIZE BASED ON AURORA STANDARD O.D.P. MOTORS.
3. MODELS 341A ~~& 342A~~ USE JM MOTOR FRAMES.
   ~~MODELS 361A & 362A USE JP MOTOR FRAMES.~~

340A/~~360A~~ Series
Single Stage End Suction Pumps

- Capacities to 4500 G.P.M. (850 M^3/HR)
- Heads to 370 Feet (78 Meters)
- Temperatures to 300°F (149°C)

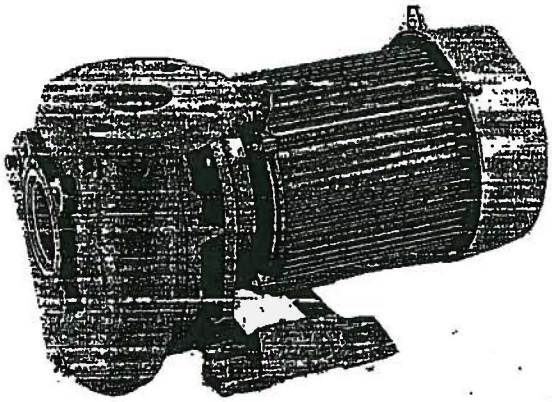

Model 341A

Legacy Well House
Intermediate Pump

☐NO EXCEPTION TAKEN ☑MAKE CORRECTIONS NOTED
☐REJECTED ☐REVISE AND RESUBMIT
☐SUBMIT SPECIFIED ITEM

Checking is only for general conformance with the design concept of the project and general compliance with the information given in the contract documents. Any action shown is subject to the requirements of the plans and specifications. Contractor is responsible for: dimensions which shall be confirmed and correlated at the job site; fabrication processes and techniques of construction; coordination of his work with that of all other trades; and the satisfactory performance of his work.

HOLLADAY ENGINEERING CO.

Date 7/16/07

Submittal lists both 15hp & 10hp motor specification calls for a 10hp motor.

AURORA®
PENTAIR PUMP GROUP

booster station: Intermediate pump

PC116275B

PUMP DATA SHEET
AURORA PUMPS

H2Optimize ver: 6.041
07/05/07

Selection file: (untitled)
Catalog: AURORA60.MPC v 1

Data Point: Flow: 150 US gpm
Head: 173 ft

Pump: 340/360-ENCL - 3600 Size: 1.5x2x7
Speed: 3500 rpm Dia: 6.4375 in

Limits: Temperature: 300 °F Sphere size: 0.438 in
Pressure: 175 psi_g Power: — bhp

Specific Speed: Ns: 939 Nss: 4240

Dimensions: Suction: 2 in Discharge: 1.5 in

Motor: ~~15~~ hp Speed: 3600 Frame: ~~254T~~ 213JM
~~NEMA Standard~~ ODP
?10?
sized for Max Power on Design Curve

Fluid: Water Temperature: 60 °F
SG: 1
Viscosity: 1.122 cP
Vapor pressure: 0.2568 psi_a
Atm pressure: 14.7 psi_a

NPSHa: — ft

Piping: System: —
Suction: — in
Discharge: — in

— Data Point —
Flow: 150 US gpm
Head: 173 ft
Eff: 71%
Power: 9.17 bhp
NPSHr: 18.5 ft

— Design Curve —
Shutoff Head: 193 ft
Shutoff dP: 83.6 psi
Min Flow: - US gpm
BEP: 72% eff
@ 171 US gpm
NOL Pwr: 10.4 bhp
@ 194 US gpm

— Max Curve —
Max Pwr: 11.7 bhp
@ 195 US gpm

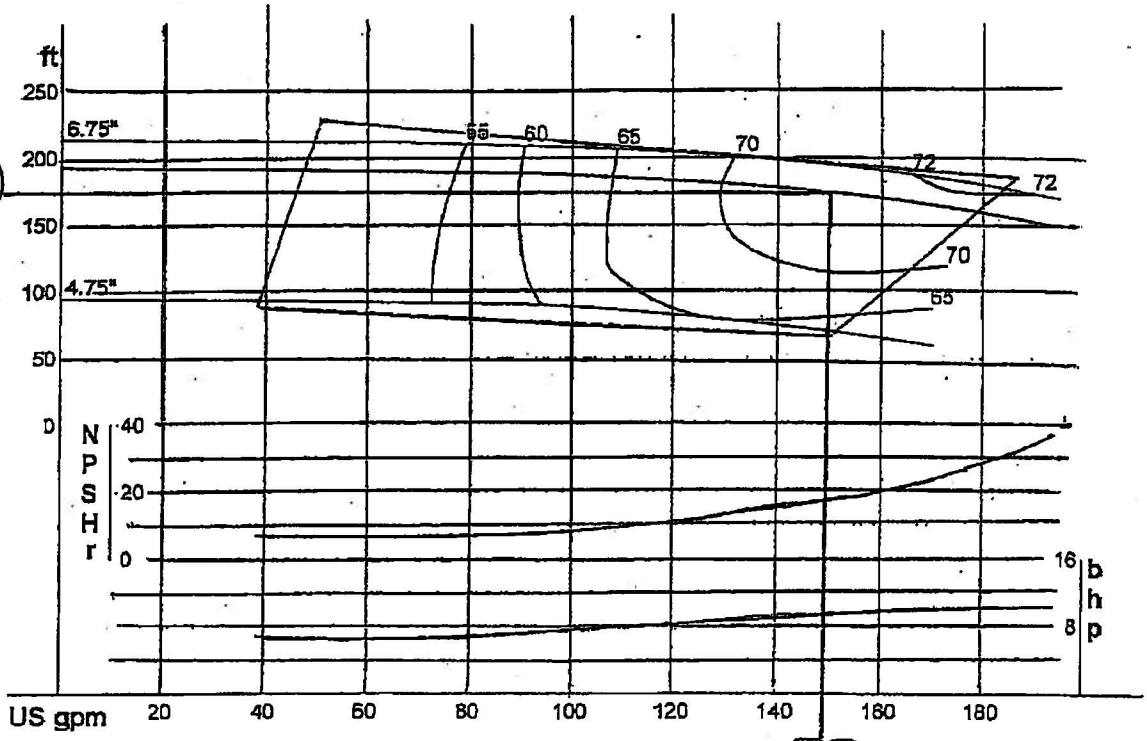

— PERFORMANCE EVALUATION —

Flow US gpm	Speed rpm	Head ft	Pump %eff	Power bhp	NPSHr ft	Motor %eff	Motor kW	Hrs/yr	Cost /kWh
180	3500	159	71	10.1	29.2				
150	3500	173	71	9.17	18.5				
120	3500	183	68	8.16	11.2				
90	3500	189	60	7.14	7.45				
60	3500	190	43	6.73	7				

Project Name: Legacy booster station: Intermediate pump
Author Name: .
Date Created:

AURORA®
PENTAIR PUMP GROUP

Single Stage End Suction-341

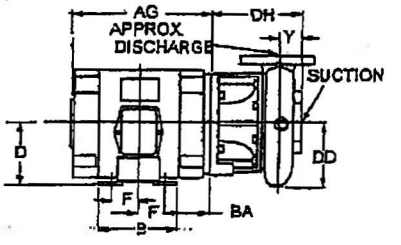

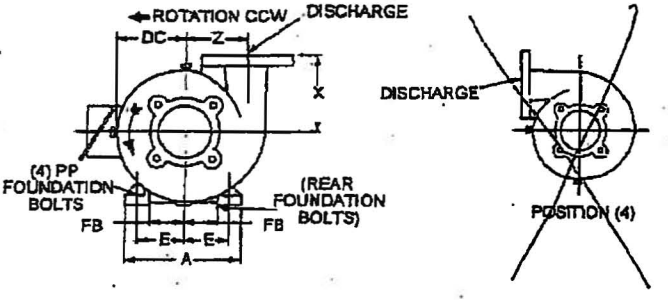

Units of Measurement: Inches

PP	FB	X	Y	Z	DC	DD	DH	A	B	D	E	F	H	AG APPROX	BA
0.5	3.88	5.38	2.5	4.31	5.13	5.38	7.31	10.5	7.5	5.25	4.25	2.75	0.41	14.0	4.5

Pump Type: 340/360-ENCL	Pump Size: 1-1/2x2x7
Pump Speed: 3600 RPM	Pump Weight Only: 95.0 lbs
Frame Size: 213JM	Power Frame: N/A
Cover Size:	Frequency: 60 HZ
Coupling: Standard	Pump Flange: 1.5" discharge 2" suction
Base Plate: None	Discharge Position: vertical
Enclosure: Open Drip Proof	Rotation: standard
Voltage/Phase: 3 PH 230/460	HorsePower: 19

Drawing Notes:

1. ALL DIMENSIONS ARE IN INCHES OR METRIC (MILLIMETERS).
2. DIMENSIONS MAY VARY ± 1/4 (6 mm).
3. NOT FOR CONSTRUCTION PURPOSES UNLESS CERTIFIED.
4. CHECK DISCHARGE POSITION.
   CASING DIMENSIONS WHICH EXCEED DIMENSION "D" MAY REQUIRE PADS FOR THE MOTOR.
5. CONDUIT BOX IS SHOWN IN APPROXIMATE LOCATION.
   DIMENSIONS ARE NOT SPECIFIED AS THEY VARY WITH EACH MOTOR MANUFACTURER.
6. 2" (51 mm) DISCHARGE AND LARGER PUMPS ARE 125# ANSI FLANGED CONNECTIONS.
7. 1-1/4(IN) DISCHARGE X 1-1/2 (IN) SUCTION AND 7 INCH AND 9

INCH CASE BORE PUMPS WILL BE WITH THREADED CONNECTIONS.

8. INFORMATION CONTAINED HEREIN IS CONFIDENTIAL; IT IS THE PROPERTY OF PENTAIR PUMP GROUP; IT IS TO BE USED SOLELY FOR THE PURPOSE PROVIDED, AND IT IS NOT TO BE DISCLOSED TO OTHERS FOR OTHER PURPOSE WITHOUT THE PRIOR WRITTEN CONSENT OF PENTAIR PUMP GROUP.

Comments:

Motor is suitable for 200v 3phase power

Material of Construction and Design Details

Material of Construction

Pump Part	Standard Fitted	Bronze Fitted	All-Iron	*All-Bronze
Casing	Cast Iron ASTM A48	Cast Iron ASTM A48	Cast Iron ASTM A48	Bronze ASTM B62
Case Wearing Ring	Bronze ASTM B62	Bronze ASTM B62	Cast Iron ASTM A48	Bronze ASTM B62
Impeller	Cast Iron ASTM A48	Bronze ASTM B584	Cast Iron ASTM A48	Bronze ASTM B584
Motor Bracket	Cast Iron ASTM A48	Cast Iron ASTM A48	Cast Iron ASTM A48	Cast Iron ASTM A48
Shaft	Steel AISI C1045	Steel AISI C1045	Steel AISI C1045	Steel AISI C1045
Sleeve	Bronze ASTM B62	Bronze ASTM B62	Stainless Steel AISI 316	Bronze ASTM B62
Power Frame (344A & 364A)	Cast Iron ASTM A48	Cast Iron ASTM A48	Cast Iron ASTM A48	Cast Iron ASTM A48
Mechanical Seal 340A Series 360A Series (Optional)	303 stainless steel metal parts, "Buna-N" elastomer parts, Ni-Resist seat and carbon washer			303 stainless steel metal parts, viton elastomer, ceramic seat, and carbon washer
Stuffing Box	Cast Iron ASTM A48	Cast Iron ASTM A48	Cast Iron ASTM A48	Bronze ASTM B62
Packing (Standard) 360A Series Only	Interwoven, graphited fiber diagonally cut			

* All Bronze optionally available in 361A and 364A pumps only.

MODELS 341A-342A-361A-362A
60 HERTZ MOTOR DATA SHEET
~~1 PHASE: NOT AVAILABLE~~
3 PHASE: 200 (ONLY) OR 230/460
~~OR 575 VOLTS~~

JM ~~& JP MOTOR FRAMES~~

HP	RPM	C FLANGE MOTORS HORIZONTAL FOOT MOUNTED 143-184JM ONLY-SUPPORT FOOT MOUNTED ON PUMP O.D.P. - TOTALLY ENC. - EXP. PROOF				MAGNETIC STARTER SIZE REQ'D NEMA 1 ENCLOSURE			APPROXIMATE FULL LOAD AMPS.			
		OPEN DRIPPROOF FRAME	SERVICE FACTOR O.D.P.	TEFC & EXP. PROOF FRAME	SERVICE FACTOR TEFC & EXP. PROOF	200V & 230V	460V	575V	200V	230V	460V	575V
1	1750	143	1.15	143	1.0	00	00	00	4.0	3.5	1.8	1.4
	1150	145		145								
1-1/2	3500	143	1.15	143	1.0	00	00	00	5.4	4.7	2.4	1.9
	1750	145		145								
	1150	182		182								
2	3500	145	1.15	145	1.0	0	00	00	6.9	6	3	2.4
	1750	145		145								
	1150	184		184								
3	3500	145	1.15	182	1.0	0	0	0	9.9	8.6	4.3	3.4
	1750	182		182								
	1150	213		213								
5	3500	182	1.15	184	1.0	1	0	0	15.9	13.8	6.9	5.5
	1750	184		184								
	1150	215		215								
7-1/2	3500	184	1.15	213	1.0	1	1	1	24.3	21.1	10.5	8.4
	1750	213		213								
	1150	254		254								
10	3500	213	1.15	215	1.0	2	1	1	31	27	13.5	10.8
	~~1750~~	~~215~~		215								
	~~1150~~	~~256~~		256								
15	3500	215	1.15	254	1.0	3	2	2	45	39.2	19.6	15.7
	1750	254		254								
	1150	284		284								
20	3500	254	1.15	256	1.0	3	2	2	58.7	51	25.5	20
	1750	256		256								
	1150	286		286								
25	3500	256	1.15	284	1.0	3	2	2	72.7	63.2	31.6	25
	1750	284		284								
	1150	324		324								
30	3500	284	1.15	286	1.0	4	3	3	97.8	76.7	38.3	31
	1750	286		286								
	1150	326		326								
40	3500	286	1.15	324	1.0	4	3	3	115	100	50	40
	1750	324		324								
50	3500	324	1.15	326	1.0	5	3	3	141	123	61.5	49
	1750	326		326								
60	3500	326	1.15	N/A	1.0	5	4	4	163	142	71	57

NOTES:
1. APPROXIMATE FULL LOAD AMPS BASED ON AVERAGES FOR AURORA STANDARD O.D.P. MOTORS.
2. MAGNETIC STARTER SIZE BASED ON AURORA STANDARD O.D.P. MOTORS.
3. MODELS 341A ~~& 342A~~ USE JM MOTOR FRAMES.
   ~~MODELS 361A & 362A USE JP MOTOR FRAMES.~~

340A/~~360A~~ Series
Single-Stage End Suction Pumps

- Capacities to 4500 G.P.M. (950 M^3/HR)
- Heads to 370 Feet (78 Meters)
- Temperatures to 300°F (149°C)

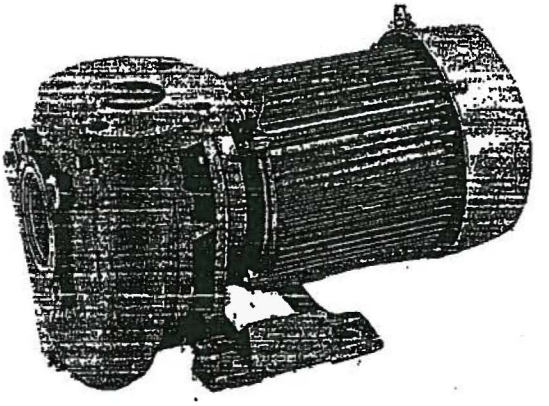

Model 341A

Legacy Well House
Main Pump

☐ NO EXCEPTION TAKEN ☑ MAKE CORRECTIONS NOTED
☐ REJECTED ☐ REVISE AND RESUBMIT
☐ SUBMIT SPECIFIED ITEM

Checking is only for general conformance with the design concept of the project and general compliance with the information given in the contract documents. Any action shown is subject to the requirements of the plans and specifications. Contractor is responsible for: dimensions which shall be confirmed and correlated at the job site: fabrication processes and techniques of construction; coordination of his work with that of all other trades; and the satisfactory performance of his work.

HOLLADAY ENGINEERING CO.

Date 7/18/07 By [illegible]

Submittal lists both a 20hp & 15hp motor specification calls for a 15hp motor.

AURORA®
PENTAIR PUMP GROUP

Legacy booster station — main booster pump

PUMP DATA SHEET
AURORA PUMPS

H2Optimize ver: 6.041
07/05/07

Selection file: (untitled)
Catalog: AURORA60.MPC v 1

Curve: PC116282

Design Point: Flow: 225 US gpm
Head: 173 ft

Pump: 340/360-ENCL - 3600
Speed: 3500 rpm
Size: 2x2.5x7A
Dia: 6.5625 in

Limits: Temperature: 300 °F
Pressure: 175 psi_g
Sphere size: 0.375 in
Power: — bhp

Specific Speed: Ns: 1245 Nss: 8260

Dimensions: Suction: 2.5 in Discharge: 2 in

Motor: 20 hp ? 15 hp ?
Speed: 3600
NEMA Standard
sized for Max Power on Design Curve
Frame: ~~250T~~ 215 JM
ODP

Fluid: Water
Temperature: 60 °F
SG: 1
Viscosity: 1.122 cP
Vapor pressure: 0.2568 psi_a
Atm pressure: 14.7 psi_a

NPSHa: --- ft

Piping:
System: --
Suction: --- in
Discharge: --- in

— Data Point —
Flow: 225 US gpm
Head: 176 ft
Eff: 73%
Power: 13.8 bhp
NPSHr: 10.9 ft

-- Design Curve --
Shutoff Head: 190 ft
Shutoff dP: 82.3 psi
Min Flow: - US gpm
BEP: 76% eff
@ 291 US gpm
NOL Pwr: 17.8 bhp
@ 360 US gpm

-- Max Curve --
Max Pwr: 19.4 bhp
@ 363 US gpm

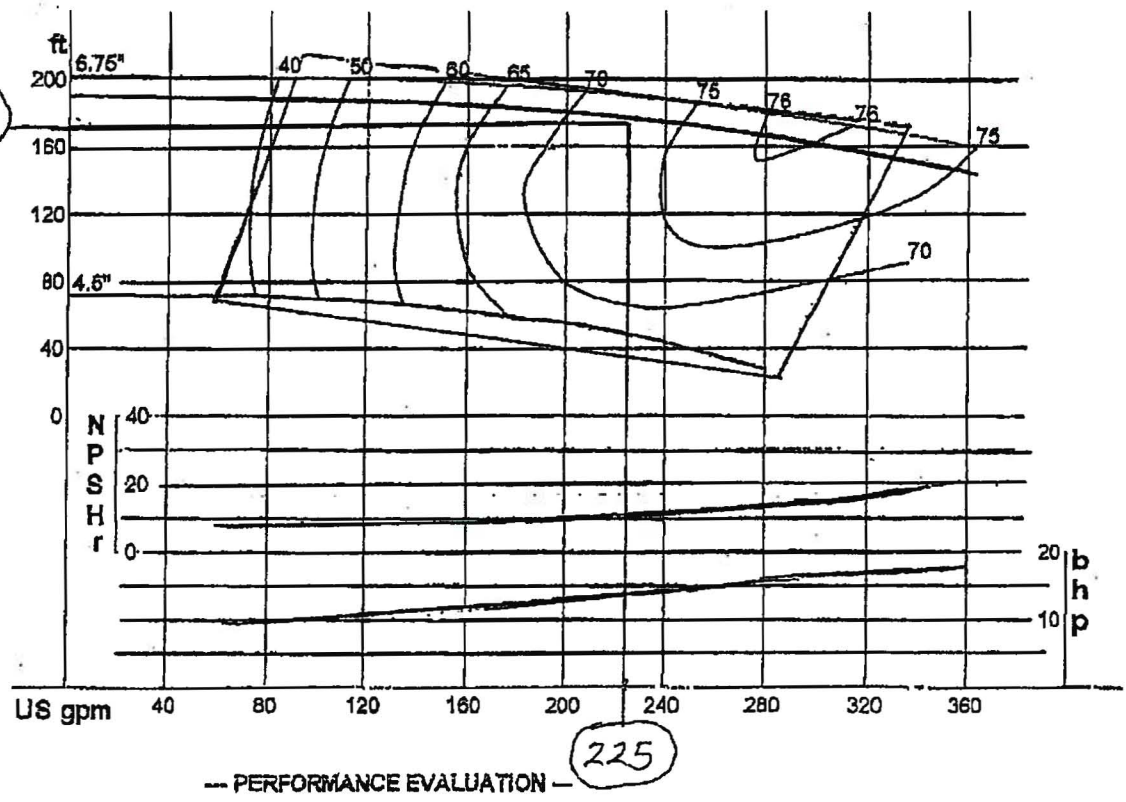

--- PERFORMANCE EVALUATION ---

Flow US gpm	Speed rpm	Head ft	Pump %eff	Power bhp	NPSHr ft	Motor %eff	Motor kW	Hrs/yr	Cost /kWh
270	3500	169	76	15.2	12.9				
225	3500	176	73	13.8	10.9				
180	3500	182	67	12.4	8.93				
135	3500	186	57	11.1	8				
90	3500	188	43	9.85	8				

Project Name: Legacy Booster Station – main booster pump
Author Name:
Date Created:

AURORA
PENTAIR PUMP GROUP

Single Stage End Suction-341

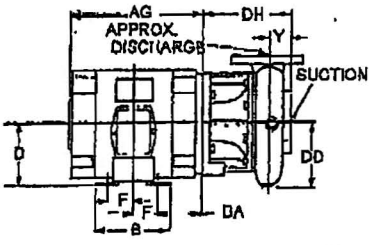

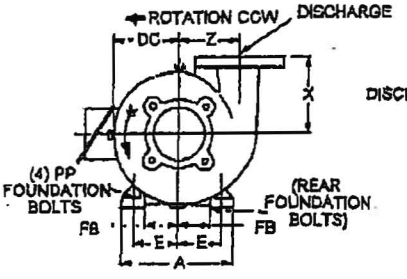

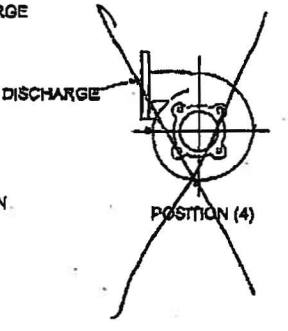

STANDARD POSITION (1)

Units of Measurement: Inches

PP	FB	X	Y	Z	DC	DD	DH	A	B	D	E	F	H	AG APPROX	BA
0.5	3.88	5.63	1.88	4.56	5.38	5.81	6.81	10.5	9.0	5.25	4.25	3.5	0.41	15.0	4.5

Pump Type: 340/360-ENCL	Pump Size: 2x2-1/2x7A
Pump Speed: 3600 RPM	Pump Weight Only: 81.0 lbs
Frame Size: 215JM	Power Frame: N/A
Cover Size:	Frequency: 60 HZ
Coupling: Standard	Pump Flange: 2.5" suction 2" discharge
Base Plate: None	Discharge Position: vertical
Enclosure: Open Drip Proof	Rotation: Standard
Voltage/Phase: 3 PH 230/460	HorsePower: 15

Drawing Notes:

1. ALL DIMENSIONS ARE IN INCHES OR METRIC (MILLIMETERS).
2. DIMENSIONS MAY VARY ± 1/4 (6 mm).
3. NOT FOR CONSTRUCTION PURPOSES UNLESS CERTIFIED.
4. CHECK DISCHARGE POSITION.
   CASING DIMENSIONS WHICH EXCEED DIMENSION "D" MAY REQUIRE PADS FOR THE MOTOR.
5. CONDUIT BOX IS SHOWN IN APPROXIMATE LOCATION.
   DIMENSIONS ARE NOT SPECIFIED AS THEY VARY WITH EACH MOTOR MANUFACTURER.
6. 2" (51 mm) DISCHARGE AND LARGER PUMPS ARE 125# ANSI FLANGED CONNECTIONS.
7. 1-1/4(IN) DISCHARGE X 1-1/2 (IN) SUCTION AND 7 INCH AND 8

Material of Construction and Design Details

Material of Construction

Pump Part	Standard Fitted	Bronze Fitted	All-Iron	*All-Bronze
Casing	Cast Iron ASTM A48	Cast Iron ASTM A48	Cast Iron ASTM A48	Bronze ASTM B62
Case Wearing Ring	Bronze ASTM B62	Bronze ASTM B62	Cast Iron ASTM A48	Bronze ASTM B62
Impeller	Cast Iron ASTM A48	Bronze ASTM B584	Cast Iron ASTM A48	Bronze ASTM B584
Motor Bracket	Cast Iron ASTM A48	Cast Iron ASTM A48	Cast Iron ASTM A48	Cast Iron ASTM A48
Shaft	Steel AISI C1045	Steel AISI C1045	Steel AISI C1045	Steel AISI C1045
Sleeve	Bronze ASTM B62	Bronze ASTM B62	Stainless Steel AISI 316	Bronze ASTM B62
Power Frame (344A & 364A)	Cast Iron ASTM A48	Cast Iron ASTM A48	Cast Iron ASTM A48	Cast Iron ASTM A48
Mechanical Seal 340A Series	303 stainless steel metal parts, "Buna-N" elastomer parts, Ni-Resist seat and carbon washer			303 stainless steel metal parts, viton elastomer, ceramic seat, and carbon washer
360A Series (Optional)				
Stuffing Box	Cast Iron ASTM A48	Cast Iron ASTM A48	Cast Iron ASTM A48	Bronze ASTM B62
Packing (Standard) 360A Series Only	Interwoven, graphited fiber diagonally cut			

* All Bronze optionally available in 361A and 364A pumps only.

INCH CASE BORE PUMPS WILL BE WITH THREADED CONNECTIONS.

8. INFORMATION CONTAINED HEREIN IS CONFIDENTIAL; IT IS THE PROPERTY OF PENTAIR PUMP GROUP; IT IS TO BE USED SOLELY FOR THE PURPOSE PROVIDED, AND IT IS NOT TO BE DISCLOSED TO OTHERS FOR OTHER PURPOSE WITHOUT THE PRIOR WRITTEN CONSENT OF PENTAIR PUMP GROUP.

Comments:

Motor is suitable for 200v 3phase power

MODELS 341A ~~342A 361A 362A~~
60 HERTZ MOTOR DATA SHEET
~~1 PHASE: NOT AVAILABLE~~
3 PHASE: 200 (ONLY) OR 230/460
~~OR 575 VOLTS~~

JM & ~~JP~~ MOTOR FRAMES

HP	RPM	C FLANGE MOTORS HORIZONTAL FOOT MOUNTED 143-184JM ONLY-SUPPORT FOOT MOUNTED ON PUMP O.D.P. - TOTALLY ENC. - EXP. PROOF				MAGNETIC STARTER SIZE REQ'D NEMA 1 ENCLOSURE			APPROXIMATE FULL LOAD AMPS.			
		OPEN DRIPPROOF FRAME	SERVICE FACTOR O.D.P.	TEFC & EXP. PROOF FRAME	SERVICE FACTOR TEFC & EXP. PROOF	200V & 230V	460V	575V	200V	230V	460V	575V
1	1750	143	1.15	143	1.0	00	00	00	4.0	3.5	1.8	1.4
	1150	145		145								
1-1/2	3500	143	1.15	143	1.0	00	00	00	5.4	4.7	2.4	1.9
	1750	145		145								
	1150	182		182								
2	3500	145	1.15	145	1.0	0	00	00	6.9	6	3	2.4
	1750	145		145								
	1150	184		184								
3	3500	145	1.15	182	1.0	0	0	0	9.9	8.6	4.3	3.4
	1750	182		182								
	1150	213		213								
5	3500	182	1.15	184	1.0	1	0	0	15.9	13.8	6.9	5.5
	1750	184		184								
	1150	215		215								
7-1/2	3500	184	1.15	213	1.0	1	1	1	24.3	21.1	10.5	8.4
	1750	213		213								
	1150	254		254								
10	3500	213	1.15	215	1.0	2	1	1	31	27	13.5	10.8
	1750	215		215								
	1150	256		256								
15	3500	215	1.15	254	1.0	3	2	2	45	39.2	19.6	15.7
	~~1750~~	~~254~~		254								
	~~1150~~	~~284~~		284								
20	3500	254	1.15	256	1.0	3	2	2	58.7	51	25.5	20
	1750	256		256								
	1150	286		286								
25	3500	256	1.15	284	1.0	3	2	2	72.7	63.2	31.6	25
	1750	284		284								
	1150	324		324								
30	3500	284	1.15	286	1.0	4	3	3	97.8	76.7	38.3	31
	1750	286		286								
	1150	326		326								
40	3500	286	1.15	324	1.0	4	3	3	115	100	50	40
	1750	324		324								
50	3500	324	1.15	326	1.0	5	3	3	141	123	61.5	49
	1750	326		326								
60	3500	326	1.15	N/A	1.0	5	4	4	163	142	71	57

NOTES:
1. APPROXIMATE FULL LOAD AMPS BASED ON AVERAGES FOR AURORA STANDARD O.D.P. MOTORS.
2. MAGNETIC STARTER SIZE BASED ON AURORA STANDARD O.D.P. MOTORS.
3. MODELS 341A ~~& 342A~~ USE JM MOTOR FRAMES.
~~MODELS 361A & 362A USE JP MOTOR FRAMES.~~

[ERR]

HYDRAULIC ANALYSIS
DWT-CATM
3 Stage 10x14RJLO

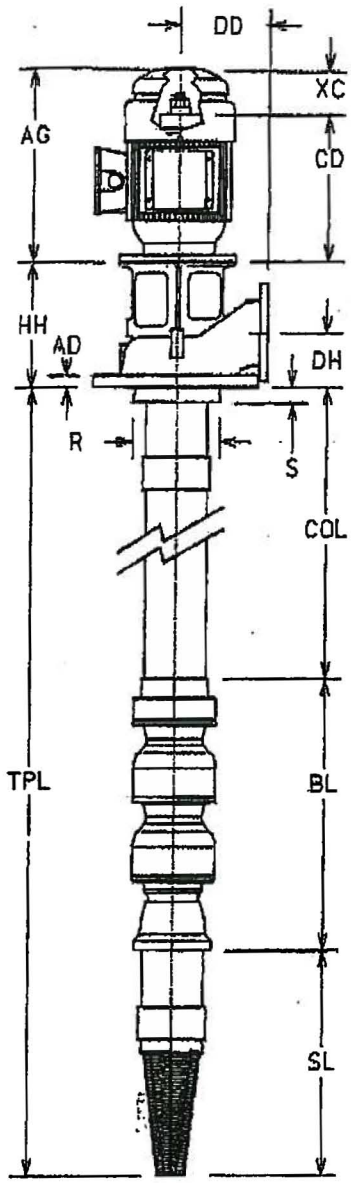

AD:	1.13
AG:	41.63
BD:	16.5
BL:	48.01
CAN:	N/A
CD:	36.94
CL:	N/A
COL:	175.0'
DD:	14.00
DH:	9.25
G:	25.00
H:	22.75
HH:	19.00
J:	0.75
R:	14.60
S:	2.38
SL:	30.00
TPL:	181.5'
UG:	N/A
V:	0.75

Pump Data

Size:	14RJLO
Stages:	3
Impellers:	Bronze
Bowl:	Cast Iron
BowlShaft:	416SS 1.94"
Lineshaft Bearing:	Rubber
LineShaft Matl:	C-1045 1.5"
LineShaft Type:	Open
Column:	Standard Steel
Column:	10" Threaded
Bearing Spacing:	10 feet
Section Length:	10 feet
Head:	A:Cast
Flange (Disch.):	10" 125#
Inlet:	
Lineshaft Coupling:	C1018
Seal:	Packing
Strainer:	Cone
SubBase:	None

Hydraulic Data

Flow (gpm):	1600
Pump Head (ft):	86.9
TDH (ft):	211.0
Speed (rpm):	1770
Fluid:	Water
Temperature (F):	60
Viscosity:	1.105
Spec.Grav:	1

Miscellaneous

Thrust At Design:	4461
Thrust At Shutoff:	6243
Min Water Level(in):	1440

Weight

Pump:	10634
Motor:	1150
Total:	11784

Motor Data

Model:	B411
Make:	USEM
HP:	125
RPM:	1800
Type:	RUE
Efficiency:	94.5
Frame:	405TP
Ratchet:	NRR

Version: 2.52 Customer: Date: 06-25-2007

(2)

HYDRAULIC ANALYSIS
DWT-CATM
3 Stage 10x14RJLO

[ERR]

Overall Pump Parameters

Size and Model:	14RJLO	Pump Operating Speed, RPM:	1770
Capacity, GPM:	1600	Total Dynamic Head, Ft.:	211.0
Total Pump Length, In.:	2178.0	Impeller Trim, In.:	9.6
Pump Type:	Well	Head Type:	A:Cast
Pump K-Factor:	16.2	Number of Stages:	3
		Pumping Level, In.:	1440.0

LineShaft-Related Data

Shaft Diameter, In.:	1.5	Shaft Limit, HP:	216
Shaft Material:	C-1045	Matl Correction Fact:	1
LineShaft Length, In.:	2100.00	Shaft Elongation, w/o Adder:	0.14
		LineShaft Type:	Open

Bowl Data

Total Bowl Length, In.:	48.01	Bowl Diameter, In.:	13.625
Bowl Shaft Dia, In.:	1.94	Bowl Shaft Limit, HP:	588
		Bowl Shaft Material:	416SS

Column Data

Column Diameter, In.:	10	Column Load, Lb.:	2877.0
Wall Thickness, In:	0.365	Column Elongation, In.:	0.02

HorsePower Data

Shaft Friction Loss, Hp.:	1.94	Thrust Load Loss, Hp.:	0.59
Bowl HP At Design, Hp.:	99.7	Motor HorsePower, Hp.:	125

Head Data

Column Loss, Ft.:	3.62	Head Loss, Ft.:	0.49
		Total Loss, Ft.:	4.10

Other Data

Hydraulic Thrust, Lb.:	3418.2	Thrust at Design, Lb.:	4461.0
Thrust at Shutoff, Lb.:	6242.6	Design NPSH, Ft.:	17.2
Available Lateral, In.:	1	Design Lateral, In.:	0.12
Shutoff Lateral, In.:	0.19	Actual Head above Grade, Ft.:	86.90

Efficiency Data (Efficiencies estimated not guaranteed)

Bowl Efficiency:	85.30	Pump Efficiency:	81.58
Motor Efficiency:	94.50	Overall Efficiency:	77.09
		KWH/1000 gallons:	0.86

Component Weights

Bowl Weight, Lbs.:	849	Column Weight,Lbs.:	9245
Head Weight, Lbs.:	540	Can Weight,Lbs.:	0
Motor Weight, Lbs.:	1150	Total Pump Weight,Lbs.:	11784

Company: Layne of Idaho, Inc. Customer:
Name:
Date: 06/25/07 Order No:

Pump:
Size: 14RJLO (3 stages)
Type: Lineshaft Speed: 1770 rpm
Synch speed: 1800 rpm Dia: 9.625 in
Curve: 3123
Specific Speeds: Ns: 2730
Pump Notes for Standard Sizes:
Suction Size-10" Discharge Sizes-8",10",12"
Vertical Turbine: Bowl size: 13.63 in
Max lateral: 1 in
Thrust K factor: 16.2 lb/ft

Search Criteria:
Flow: 1600 US gpm Head: 210 ft

Fluid:
Water Temperature: 60 °F
SG: 1 Vapor pressure: 0.2563 psi a
Viscosity: 1.105 cP Atm pressure: 14.7 psi a
NPSHa: --- ft

Motor:
Standard: NEMA Size: 100 hp
Speed: 1800

Pump Limits for Standard Construction:
Temperature: 120 °F Pressure: 340 psi g
Sphere size: 0.98 in

Sizing criteria: Max Power on Design Curve

--- Data Point ---
Flow: 1600 US gpm
Head: 211 ft
Eff: 85.3%
Power: 99.7 hp
NPSHr: 17.2 ft

-- Design Curve --
Shutoff Head: 321 ft
Shutoff dP: 139 psi
Min Flow: --- US gpm
BEP: 85.4% eff
@ 1572 US gpm
NOL Pwr: 99.7 hp
@ 1675 US gpm

-- Max Curve --
Max Pwr: 105 hp
@ 1700 US gpm

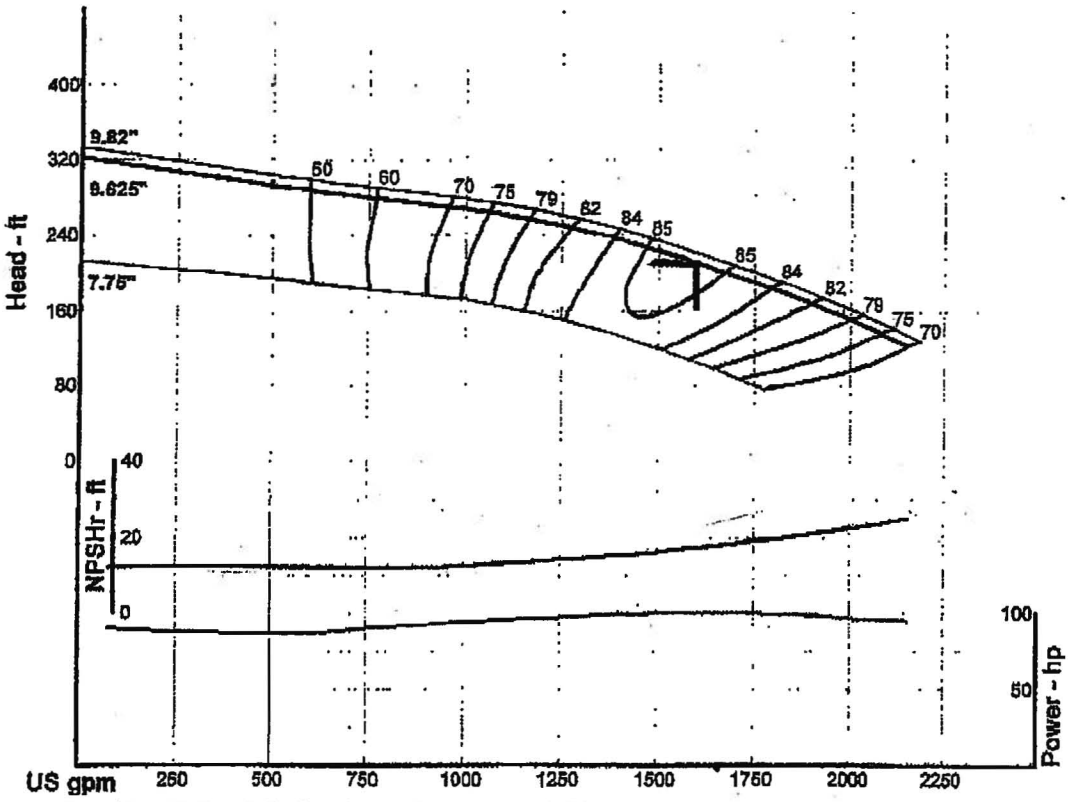

Performance Evaluation:

Flow US gpm	Speed rpm	Head ft	Pump %eff	Power hp	NPSHr ft
1920	1770	164	81.4	97.6	21.2
1600	1770	211	85.3	99.7	17.2
1280	1770	247	82.1	97	14.3
960	1770	270	70.1	93	12.2
640	1770	285	52.3	87.6	12

APPENDIX G

CITY OF EAGLE

TABLE OF WATER RIGHTS

Eagle Well No.	Common Name	Location	Water Right Number: Reservoir (3)	63-11413	63-12448	63-9331	63-32960 lease	63-32089	63-32090	Diversion Limit, Domestic Flow, cfs	Diversion Limit, Fire Flow, cfs
1	Lexington 1	NW, SW, S.3, T.4N, R.1E	x	x	x		x			3.25	Note 1
2	Lexington 2	SW, SW, S.3, T.4N, R.1E	x	x	x		x			3.25	Note 1
	Fl. Feather	SE, SW, S.5, T.4N, R.1E	x	x	x					3.25	Note 1
3	Brookwood	SW, SW, S.4, T.4N, R.1E	x		x		x			3.25	Note 1
	future well	NE, SE, S.4, T.4N, R.1E			x					3.25	Note 1
	Municipal	NE, NE, S.17, T.4N, R.1E				x				0.1	none
4	Legacy	SE, NW, S.11, T.4N, R.1W					x	x	x	2.23	Note 2
5	Eaglefield	NW, SE, S.11, T.4N, R.1W					x	x	x	2.23	Note 2
	future well	NW, SE, S.11, T.4N, R.1W					x	x	x	2.23	Note 2
	future well	NW, NE, S.10, T.4N, R.1W						x	x	2.23	Note 2
	future well	NW, NW, S.10, T.4N, R.1W						x	x	2.23	Note 2
	future well	SE, SE, S.11, T.4N, R.1W					x			2.23	Note 2

Notes:

1 State Statue 42-201(3) allows a municipal water purveyor to divert water as needed in an emergency fire event. Fire flow diversion capacity is limited to short-term pumping capacity of a well.

2 Fire flow diversion rate is listed as 6.67cfs on water right 63-32089 and 63-32089. State Statue 42-201(3) allows a municpal water purveyor to divert water as needed in an emergency fire event. Fire flow diversion capacity is limited to short-term pumping capacity of a well.

3 Reservoir tie for emergency and fire flow capability.

1019-03

State of Idaho
DEPARTMENT OF WATER RESOURCES
322 East Front Street • P.O. Box 83720 • Boise, Idaho 83720-0098
Phone: (208) 287-4800 • Fax: (208) 287-6700 • Web Site: www.idwr.idaho.gov

C. L. "BUTCH" OTTER
Governor

DAVID R. TUTHILL, JR.
Director

March 11, 2008

RECEIVED
MAR 13 2008
MSB&T, CTD.

CITY OF EAGLE
660 E CIVIC LANE
PO BOX 1520
EAGLE ID 83616

RE: RENTAL OF WATER RIGHT NO. 63-32960 FROM THE WATER SUPPLY BANK

Dear Renter:

Please find enclosed a receipt in the amount of $ 480.06 and a copy of a fully executed Water Supply Bank Rental Agreement in connection with the rental of 342.9 acre-feet of ground water for municipal use during 2008. Upon receipt of this fully executed agreement, you are authorized to divert water in compliance with the conditions of water use described in the agreement.

If you have any questions regarding this matter, please contact me at 287-4943.

Sincerely,

Aaron Marshall
Water Allocation Bureau

Encl: 2

c: John Westra – IDWR Western Regional Office
Bruce M. Smith – Moore Smith Buxton & Turke

BMS
File
Chron

RECEIVED
MAR 1 0 2008

Idaho Department of Water Resources Receipt

Receipt ID: C086223

Payment Amount $480.06 Date Received 3/10/08 2:00 Region STATE

Payment Type Check Check Number 12137

Payer CITY OF EAGLE

Comments Water Right Rental Fees 63-32960

Fee Details

Amount	Description	Fund	Fund Detail	PCA	Subobject
$480.06	WATER BANK-DEPARTMENT SHARE	0229	21	55109	1205

Signature Line (Department Representative)

COPY

RECEIVED
MAR 10 2008
DEPARTMENT OF WATER RESOURCES

STATE OF IDAHO
DEPARTMENT OF WATER RESOURCES

WATER SUPPLY BANK RENTAL AGREEMENT

This is to certify that: CITY OF EAGLE
660 E CIVIC LN
PO BOX 1520
EAGLE ID 83616
(208) 331-1800

filed an application to rent water from the Water Supply Bank ("Bank"). The Idaho Water Resource Board ("Board") being authorized to operate a Bank and to contract by and through the Director of the Idaho Department of Water Resources ("Director, Department") for rental of water from the Bank agrees to rent water as follows:

Summary of Water Rights or Portions Rented from the Bank

	Water Right	Rented Rate	Annual Rented Volume	Total Rented Acres
	63-32960	[illegible]00 CFS	342.9 AF	N/A
COMBINED RENTAL TOTALS:		[illegible]00 CFS	**342.9 AF**	**N/A**

TERM OF RENTAL: [illegible]ebruary 29, 2008 to December 31, 2012

RENTAL FEE: $ 480.06 annually

The total fee for rental of the above-described water is $ 4,800.60 per year. The undersigned renter has a private agreement with the lessor of the right, and is therefore obligated to pay only the administrative fee of $480.06 annually. An annual payment shall be received by the Department of Water Resources prior to January 1, each year for the duration of the rental period. The agreement will be void if the payment is not received in a given year.

Detailed water right specific limitations and conditions attached.

The undersigned renter agrees to use the water rights under this agreement in accordance with the Water Supply Bank rules and in compliance with the limitations and conditions of use described in this agreement.

Dated this 6th day of FEBRUARY, 2008.

By: PHIL BOARDY (Print Name) (Signature)

MAYOR (Title if on behalf of company or organization)

Having determined that this agreement satisfies the provisions of Section 42-1763, Idaho Code, and, IDAPA 37.02.03030 (Water Supply Bank Rule 30), for the rental and use of water under the terms and conditions herein provided, and none other, I hereby execute this Rental Agreement on behalf of the Idaho Water Resource Board this 10TH day of MARCH, 2008.

FOR DAVID R. TUTHILL, JR., Director
Department of Water Resources

WATER RIGHT NO. 63-32960
WATER SUPPLY BANK RENTAL AGREEMENT

The renter agrees to use the water rented under this agreement in accordance with the Water Supply Bank rules and in compliance with the limitations and conditions of use described below:

Renter: CITY OF EAGLE
660 E CIVIC LN
PO BOX 1520
EAGLE ID 83616
(208) 331-1800

Priority Date: 10/06/1973

Source: GROUND WATER

BENEFICIAL USE	From	To	Diversion Rate	Volume
MUNICIPAL	01/01	to 12/31	2.00 CFS	342.9 AF
		Total:	2.00 CFS	*342.9 AF

LOCATION OF RENTER'S POINTS OF DIVERSION:

GROUND WATER	NW¼SW¼	Sec. 3	Twp 04N	Rge 01E	ADA County
GROUND WATER	SW¼SW¼	Sec. 3	Twp 04N	Rge 01E	ADA County
GROUND WATER	SW¼SW¼	Sec. 4	Twp 04N	Rge 01E	ADA County
GROUND WATER	SE¼NW¼	Sec. 11	Twp 04N	Rge 01W	ADA County
GROUND WATER	NW¼SE¼	Sec. 11	Twp 04N	Rge 01W	ADA County
GROUND WATER	SE¼SE¼	Sec. 11	Twp 04N	Rge 01W	ADA County

RENTER'S PLACE OF USE: MUNICIPAL

Place of use is within the service area of the City of Eagle municipal water supply system as provided for under Idaho Law.

CONDITIONS OF WATER USE

1. The use of water under this agreement shall be subject to the provisions of Section 42-1766, Idaho Code.
2. * The renter is not authorized to divert more than the consumptive use portion of 342.9 acre-feet of ground water for municipal purposes under this agreement, which is a total annual diversion volume of 266.7 acre-feet.
3. The diversion of water under this agreement, when combined with rental of permit no. 63-12448 in the amount of 0.80 cfs, and water permit nos. 63-32089 and 63-32090, shall not exceed a total combined diversion rate of 2.23 cfs.
4. This rental does not grant any right-of-way or easement to use the diversion works or conveyance works of another party.
5. This rental agreement does not authorize the construction of a well.
6. Use of water under this agreement shall not prejudice any action of the Department in its consideration of any permanent application for permit filed by the applicant for this same use.
7. Renter agrees to comply with all applicable state and federal laws while using water under this agreement.
8. Renter agrees to hold the Board, the Director and the state of Idaho harmless from all liability on account of negligent acts of the renter or injury to other water rights while using water under this agreement.

WATER RIGHT NO. 63-32960
WATER SUPPLY BANK RENTAL AGREEMENT

CONDITIONS OF WATER USE

9. Renter acknowledges and agrees that the Director may terminate diversion of water or require mitigation if the Director determines that diversion and use of water under this agreement causes injury to other water rights or that there is not a sufficient water supply for the priority of the right or portion thereof being rented.
10. Failure of the renter to comply with the conditions of this agreement is cause for the Director to rescind approval of the rental agreement.
11. The renter must diligently pursue a permanent water right to provide for the uses authorized under this rental agreement.
12. In the event that continued water use is not authorized, the renter agrees to hold the Board, the Director and the state of Idaho harmless from any claim for reimbursement or expenses associated with the development of new and supplemental water uses.
13. Prior to diversion of water under this agreement, the renter shall install and maintain a measuring device and lockable controlling works of a type acceptable to the Department as part of the diverting works.
14. Prior to diversion of water and during the term of this agreement, the renter shall comply with the conditions of approval set forth in the final order in the matter of applications to appropriate water nos. 63-32089 and 63-32090 in the name of the City of Eagle, issued by the Director of the Department of Water Resources on February 26, 2008.

State of Idaho
DEPARTMENT OF WATER RESOURCES
322 East Front Street • P.O. Box 83720 • Boise, Idaho 83720-0098
Phone: (208) 287-4800 • Fax: (208) 287-6700 • Web Site: www.idwr.idaho.gov

C. L. "BUTCH" OTTER
Governor

DAVID R. TUTHILL, JR.
Director

February 29, 2008

CITY OF EAGLE
660 E CIVIC LN
PO BOX 1520.
EAGLE ID 83616

RE: APPLICATION TO RENT WATER FROM THE WATER SUPPLY BANK
WATER RIGHT NO(S). 63-32960

Dear Renter:

The Department of Water Resources (Department) acknowledges receipt of your application to rent water from the Water Supply Bank (Bank). Please find enclosed a Water Supply Bank Rental Agreement for your review and signature. Upon signature and **return** of the original agreement, together with the rental fee described below, the Department will also sign the original agreement and return an executed copy to you. Execution of the agreement and compliance with the conditions of approval authorize diversion and use of water as provided in the agreement.

On the application you requested a rental diversion rate of 2.00 cfs and a diversion volume of 320.0 acre-feet. The diversion volume applied to this rental agreement is the amount proportional to the requested diversion rate based on the amount authorized under the water right(s) rented.

The total rental fee of $4800.60 was calculated based on the current rental rate of $14.00 per acre-foot times a diversion volume of 342.9 acre-feet. Ten percent (10%) of the total rental fee is retained by the Department for administrative fees in accordance with Water Supply Bank rules, IDAPA 37.02.03.01. The remaining ninety percent (90%) is issued back to the lessor of the above referenced water right(s) in the form of a warrant. Since the lessor of the right is requesting that you only pay the administrative fee under this agreement, the Department requires that you submit only that portion of the total payment. Therefore, a rental fee of **$480.06** must be paid in accordance with the rental agreement. Please send a check made payable to the Idaho Department of Water Resources together with the signed rental agreement. Return the signed agreement and fee to my attention within ten (10) days of receipt of this letter so I can complete the processing. An annual payment shall be received by the Department prior to the execution of this agreement and prior to January 1 in all subsequent years for the duration of the rental period. The agreement will be void if the payment is not received for a given year.

Please note that applications for rental of water must be reviewed in accordance with Section 42-1763, Idaho Code, and the Department's Water Supply Bank Rule 30 (IDAPA 37.02.03.030). This includes consideration of whether there will be injury to other water rights, whether the proposal would constitute an enlargement of the water rights, whether the water will be put to a beneficial use, whether the water supply available from applicable rights in the Bank is sufficient for the use intended and whether the proposal is in the local public interest. While a one-year rental usually involves a general review of the water rights and proposed use, rental of water

over multiple years may require more comprehensive review, notice to advise anyone who desires to protest the proposed water use, and approval by the Idaho Water Resource Board.

Please review the conditions of water use described in the agreement and contact me if you have any questions at (208) 287-4943.

Sincerely,

Aaron Marshall
Water Allocation Bureau

Enc: 1

c: John Westra – IDWR Western Regional Office
Bruce M. Smith – Moore Smith Buxton & Turke

STATE OF IDAHO
DEPARTMENT OF WATER RESOURCES

WATER SUPPLY BANK RENTAL AGREEMENT

This is to certify that: CITY OF EAGLE
660 E CIVIC LN
PO BOX 1520
EAGLE ID 83616
(208) 331-1800

filed an application to rent water from the Water Supply Bank ("Bank"). The Idaho Water Resource Board ("Board") being authorized to operate a Bank and to contract by and through the Director of the Idaho Department of Water Resources ("Director, Department") for rental of water from the Bank agrees to rent water as follows:

Summary of Water Rights or Portions Rented from the Bank

	Water Right	Rented Rate	Annual Rented Volume	Total Rented Acres
	63-32960	2.00 CFS	342.9 AF	N/A
COMBINED RENTAL TOTALS:		**2.00 CFS**	**342.9 AF**	**N/A**

TERM OF RENTAL: February 29, 2008 to December 31, 2012

RENTAL FEE: $ 480.06 annually

The total fee for rental of the above-described water is $ 4,800.60 per year. The undersigned renter has a private agreement with the lessor of this right, and is therefore obligated to pay only the administrative fee of $480.06 annually. An annual payment shall be received by the Department of Water Resources prior to January 1, each year for the duration of the rental period. The agreement will be void if the payment is not received in a given year.

Detailed water right specific limitations and conditions attached.

The undersigned renter agrees to use the water rented under this agreement in accordance with the Water Supply Bank rules and in compliance with the limitations and conditions of use described in this agreement:

Dated this _____ day of _____, 20_____.

By: _____ (Print Name)

_____ (Signature)

_____ (Title if on behalf of company or organization)

Having determined that this agreement satisfies the provisions of Section 42-1763, Idaho Code, and, IDAPA 37.02.03030 (Water Supply Bank Rule 30), for the rental and use of water under the terms and conditions herein provided, and none other, I hereby execute this Rental Agreement on behalf of the Idaho Water Resource Board this ____ day of _____, 20_____.

_____
DAVID R. TUTHILL, JR., Director
Department of Water Resources

WATER RIGHT NO. 63-32960
WATER SUPPLY BANK RENTAL AGREEMENT

The renter agrees to use the water rented under this agreement in accordance with the Water Supply Bank rules and in compliance with the limitations and conditions of use described below:

Renter: CITY OF EAGLE
660 E CIVIC LN
PO BOX 1520
EAGLE ID 83616
(208) 331-1800

Priority Date: 10/06/1973

Source: GROUND WATER

BENEFICIAL USE	From	To	Diversion Rate	Volume
MUNICIPAL	01/01 to	12/31	2.00 CFS	342.9 AF
		Total:	2.00 CFS	*342.9 AF

LOCATION OF RENTER'S POINT(S) OF DIVERSION:

GROUND WATER	NW¼SW¼	Sec. 3	Twp 04N	Rge 01E	ADA County
GROUND WATER	SW¼SW¼	Sec. 3	Twp 04N	Rge 01E	ADA County
GROUND WATER	SW¼SW¼	Sec. 4	Twp 04N	Rge 01E	ADA County
GROUND WATER	SE¼NW¼	Sec. 11	Twp 04N	Rge 01W	ADA County
GROUND WATER	NW¼SE¼	Sec. 11	Twp 04N	Rge 01W	ADA County
GROUND WATER	SE¼SE¼	Sec. 11	Twp 04N	Rge 01W	ADA County

RENTER'S PLACE OF USE: MUNICIPAL

Place of use is within the service area of the City of Eagle municipal water supply system as provided for under Idaho Law.

CONDITIONS OF WATER USE

1. The use of water under this agreement shall be subject to the provisions of Section 42-1766, Idaho Code.
2. * The renter is not authorized to divert more than the consumptive use portion of 342.9 acre-feet of ground water for municipal purposes under this agreement, which is a total annual diversion volume of 266.7 acre-feet.
3. The diversion of water under this agreement, when combined with rental of permit no. 63-12448 in the amount of 0.80 cfs, and water permit nos. 63-32089 and 63-32090, shall not exceed a total combined diversion rate of 2.23 cfs.
4. This rental does not grant any right-of-way or easement to use the diversion works or conveyance works of another party.
5. This rental agreement does not authorize the construction of a well.
6. Use of water under this agreement shall not prejudice any action of the Department in its consideration of any permanent application for permit filed by the applicant for this same use.
7. Renter agrees to comply with all applicable state and federal laws while using water under this agreement.
8. Renter agrees to hold the Board, the Director and the state of Idaho harmless from all liability on account of negligent acts of the renter or injury to other water rights while using water under this agreement.

WATER RIGHT NO. 63-32960
WATER SUPPLY BANK RENTAL AGREEMENT

CONDITIONS OF WATER USE

9. Renter acknowledges and agrees that the Director may terminate diversion of water or require mitigation if the Director determines that diversion and use of water under this agreement causes injury to other water rights or that there is not a sufficient water supply for the priority of the right or portion thereof being rented.
10. Failure of the renter to comply with the conditions of this agreement is cause for the Director to rescind approval of the rental agreement.
11. The renter must diligently pursue a permanent water right to provide for the uses authorized under this rental agreement.
12. In the event that continued water use is not authorized, the renter agrees to hold the Board, the Director and the state of Idaho harmless from any claim for reimbursement or expenses associated with the development of new and supplemental water uses.
13. Prior to diversion of water under this agreement, the renter shall install and maintain a measuring device and lockable controlling works of a type acceptable to the Department as part of the diverting works.
14. Prior to diversion of water and during the term of this agreement, the renter shall comply with the conditions of approval set forth in the final order in the matter of applications to appropriate water nos. 63-32089 and 63-32090 in the name of the City of Eagle, issued by the Director of the Department of Water Resources on February 26, 2008.

57. The proposal conserves the water resources of the state of Idaho because irrigation and other outside uses of water will be provided primarily by other water rights.

ORDER

IT IS HEREBY ORDERED that applications to appropriate water nos. 63-32089 and 63-32090 are **Approved** subject to the limitations and conditions set forth below.

IT IS FURTHER ORDERED that the beneficial uses and flow rates authorized are as follows:

Application no. 63-32089

Municipal	2.23 cfs
Fire Protection	1.77 cfs

Application no. 63-32090

Fire Protection	4.91 cfs
Total	**8.91 cfs**

IT IS FURTHER ORDERED that the approved applications to appropriate water nos. 63-32089 and 63-32090 are subject to the following conditions:

Proof of application of water to beneficial use shall be submitted for both permits on or before **March 1, 2013.**

In connection with the proof of beneficial use submitted for this permit, the permit holder shall also submit a report showing the total annual volume, the maximum daily volume, and the maximum instantaneous rate of flow diverted from the points of diversion authorized for these permits during the development period. The report shall also show the maximum instantaneous rate of diversion, either measured or reasonably estimated by a qualified professional engineer, geologist, or certified water rights examiner, for the entire City of Eagle municipal water system. The report shall also describe and explain how flows diverted under these permits provide an additional increment of beneficial use of water for the City of Eagle municipal water system as opposed to an alternative point of diversion for prior water rights already held and used by the City of Eagle for its municipal water system.

Project construction shall commence within one year from the date of permit issuance and shall proceed diligently to completion unless it can be shown to the satisfaction of the Director of the Department of Water Resources that delays were due to circumstances over which the permit holder had no control.

Subject to all prior water rights.

Place of use is within the service area of the City of Eagle municipal water supply system as provided for under Idaho law.

Prior to diversion of water under this right, the right holder shall install and maintain a measuring device and lockable controlling works of a type acceptable to the Department as part of the diverting works.

Right holder shall comply with the drilling permit requirements of Section 42-235, Idaho Code and applicable Well Construction Rules of the Department.

Domestic uses from four flowing artesian wells identified as points of diversion for water right nos. 63-2546 and 63-2609 and an unrecorded domestic use of ground water for the home presently owned by Joseph and Lynn Moyle are entitled to *Parker* protection. In order to avail themselves of *Parker* protection, however, on or before August 1, 2008, Moyles must initiate semiannual measurement of static water levels/pressures and semiannual testing of artesian pressure flow for each of their domestic uses to determine the reduction in delivered flow for their domestic uses. Moyles must prepare a written proposal of how the tests will be conducted and submit the proposal to the Department and the water right holder. The Department must approve the test proposal. Moyle must notify the Department and the water right holder of the date and time of the tests, and Moyles must allow the water right holder and the Department to participate in the tests.

If Moyles monitor static water levels/pressures and flow rates for the domestic uses from their wells, and water levels/pressures decline in the wells causing a reduction in flow rates for the domestic uses after the right holder begins pumping water, Moyles may petition the Department for a determination of material injury. After comparison of Moyles' monitoring data with monitoring data gathered by the right holder, IDWR will determine whether the right holder must compensate Moyles for the declines.

To avail himself of the benefits of *Parker*, on or before August 1, 2008, Meissner must begin semiannual measurements of the static water levels in the Double R Cattle Well. Meissner must allow the right holder the opportunity to observe or independently measure water levels in the Meissner well. If Meissner monitors static water levels in his well and water levels decline in the well after the right holder begins pumping water, Meissner may petition the Department for a determination of material injury. After comparison of Meissner's monitoring data with monitoring data gathered by the right holder, IDWR will determine whether the right holder must compensate Meissner for the declines.

To avail themselves of the benefits of *Parker*, on or before August 1, 2008, Purdys must begin semiannual measurements of the static water levels in the well for water right no. 63-15680. Purdys must allow the right holder the opportunity to observe or independently measure the water levels in their well. If Purdys monitor static water levels in their well and water levels decline in the well after the right holder begins pumping water, Purdys may petition the Department for a determination of material injury. After comparison of Purdys' monitoring data with monitoring data gathered by the right holder, IDWR will determine whether the right holder must compensate Purdys for the declines.

To avail themselves of the benefits of *Parker*, on or before August 1, 2008, Purdys must begin semiannual measurements of the static water levels in the well for water right no. 63-22652.

Purdys must allow the right holder the opportunity to observe or independently measure the water levels in their well. If Purdys monitor static water levels in their well and water levels decline in the well after the right holder begins pumping water, Purdys may petition the Department for a determination of material injury. After comparison of Purdys' monitoring data with monitoring data gathered by the right holder, IDWR will determine whether the right holder must compensate Purdys for the declines.

Domestic use from Taylors' flowing artesian well identified as points of diversion for water right nos. 63-5040 is entitled to *Parker* protection. In order to avail themselves of *Parker* protection, however, on or before August 1, 2008, Taylors must initiate semiannual measurement of static water levels/pressures and semiannual testing of artesian pressure flow for their domestic use to determine the reduction in delivered flow for their domestic use. Taylors must prepare a written proposal of how the tests will be conducted and submit the proposal to the Department and the water right holder. The Department must approve the test proposal. Taylors must notify the Department and the water right holder of the date and time of the tests, and Taylors must allow the water right holder and the Department to participate in the tests.

If Taylors monitor static water levels/pressures and flow rates for the domestic uses from their wells, and water levels/pressures decline in the wells causing a reduction in flow rates for the domestic uses after the right holder begins pumping water, Taylors may petition the Department for a determination of material injury. After comparison of Taylors' monitoring data with monitoring data gathered by the right holder, IDWR will determine whether the right holder must compensate Taylors for the declines.

Prior to diversion of water under this right, the right holder shall construct/identify four observation wells for future monitoring. Three wells shall be located in close proximity to one or both of the production wells. One of the wells shall be completed in the shallow aquifer, on in the immediate aquifer, and one in the deep aquifer. A fourth observation well shall be located at a more remote distance from the production wells. The completion interval for the fourth well shall be in the deep aquifer. The location and design of the observation must be approved by the Department prior to construction or designation of the observation wells. Each observation well must be constructed so that ground water in the well is derived only from one aquifer zone, and must also be constructed so that water levels in each well can be easily measured.

Prior to diversion of water under this right, the right holder shall develop and the Department must approve, a monitoring, recording, and reporting plan for the observation wells.

The right holder shall not provide water diverted under this right for the irrigation of land having appurtenant surface water rights as a primary source of irrigation water except when the surface water rights are not available for use. This condition applies to all land with appurtenant surface water rights, including land converted from irrigated agricultural use to other land uses but still requiring water to irrigate lawns and landscaping.

The Director retains jurisdiction to require the right holder to provide purchased or leased natural flow or stored water to offset depletion of Lower Snake River flows if needed for salmon migration purposes. The amount of water required to be released into the Snake River or a

tributary, if needed for this purpose, will be determined by the Director based upon the reduction in flow caused by the use of water pursuant to this permit.

The wells constructed at the points of diversion shall be constructed in accordance with the rules of the Idaho Department of Water Resources regarding well construction standards and measurement of diversions and the rules of the Department of Environmental Quality for Public Drinking Water Systems, IDAPA 58.01.08.

IT IS FURTHER ORDERED that the request for oral argument filed by Eagle is **Denied.**

Dated this 26th day of February, 2008.

David R. Tuthill, Jr.
Director

Declining Balance Worksheet at Historic Use, Chapter 4
City of Eagle Amended Water Master Plan, November 2005

Diversion Rate - Domestic (cfs)	Equivalent Residential Customers (ERC) 1	Peak Flow Demand (cfs) 2	Peak Flow Demand (gpm) 3	Diversion Rate - Domestic & Fire	Max Day Plus Fire (cfs)	Max Day Plus Fire (gpm)	Developments
2.23	5	0.0083	3.71	8.9100	3.3475	1502.47	Mosca Seca (Legacy)
2.23	10	0.0166	7.43	8.9100	3.3530	1504.95	Phase 1: 92 ERCs
2.23	15	0.0248	11.14	8.9100	3.3586	1507.43	
2.23	20	0.0331	14.85	8.9100	3.3641	1509.91	
2.23	25	0.0414	18.56	8.9100	3.3696	1512.38	
2.23	50	0.0828	37.13	8.9100	3.3972	1524.78	
2.23	75	0.1242	55.69	8.9100	3.4248	1537.17	
2.23	100	0.1656	74.25	8.9100	3.4524	1549.56	
2.23	125	0.2070	92.81	8.9100	3.4800	1561.95	Eaglefield
2.23	150	0.2484	111.38	8.9100	3.5076	1574.34	Phase 1: 116 ERCs
2.23	175	0.2898	129.94	8.9100	3.5353	1586.73	
2.23	200	0.3312	148.50	8.9100	3.5629	1599.12	
2.23	225	0.3726	167.06	8.9100	3.5905	1611.51	
2.23	250	0.4140	185.63	8.9100	3.6181	1623.91	
2.23	275	0.4554	204.19	8.9100	3.6457	1636.30	Mosca Seca (Legacy)
2.23	300	0.4968	222.75	8.9100	3.6733	1648.69	Phase 2: 150 ERCs
2.23	325	0.5382	241.31	8.9100	3.7009	1661.08	
2.23	350	0.5796	259.88	8.9100	3.7285	1673.47	
2.23	375	0.6210	278.44	8.9100	3.7561	1685.86	Eaglefield
2.23	400	0.6624	297.00	8.9100	3.7837	1698.25	Phase 2: 112 ERCs
2.23	425	0.7038	315.56	8.9100	3.8113	1710.64	
2.23	450	0.7452	334.13	8.9100	3.8389	1723.03	
2.23	475	0.7866	352.69	8.9100	3.8665	1735.43	
2.23	500	0.8280	371.25	8.9100	3.8942	1747.82	
2.23	525	0.8694	389.82	8.9100	3.9218	1760.21	
2.23	550	0.9108	408.38	8.9100	3.9494	1772.60	
2.23	575	0.9522	426.94	8.9100	3.9770	1784.99	
2.23	600	0.9936	445.50	8.9100	4.0046	1797.38	
2.23	625	1.0350	464.07	8.9100	4.0322	1809.77	
2.23	650	1.0764	482.63	8.9100	4.0598	1822.16	
2.23	675	1.1178	501.19	8.9100	4.0874	1834.56	
2.23	700	1.1592	519.75	8.9100	4.1150	1846.95	
2.23	725	1.2006	538.32	8.9100	4.1426	1859.34	
2.23	750	1.2420	556.88	8.9100	4.1702	1871.73	
2.23	775	1.2834	575.44	8.9100	4.1978	1884.12	
2.23	800	1.3248	594.00	8.9100	4.2254	1896.51	
2.23	825	1.3662	612.57	8.9100	4.2531	1908.90	
2.23	850	1.4076	631.13	8.9100	4.2807	1921.29	
2.23	875	1.4490	649.69	8.9100	4.3083	1933.68	
2.23	900	1.4904	668.25	8.9100	4.3359	1946.08	
2.23	925	1.5318	686.82	8.9100	4.3635	1958.47	
2.23	950	1.5732	705.38	8.9100	4.3911	1970.86	
2.23	975	1.6146	723.94	8.9100	4.4187	1983.25	
2.23	1000	1.6560	742.51	8.9100	4.4463	1995.64	
2.23	1025	1.6974	761.07	8.9100	4.4739	2008.03	
2.23	1050	1.7388	779.63	8.9100	4.5015	2020.42	
2.23	1075	1.7802	798.19	8.9100	4.5291	2032.81	
2.23	1100	1.8216	816.76	8.9100	4.5567	2045.21	
2.23	1125	1.8630	835.32	8.9100	4.5843	2057.60	
2.23	1150	1.9044	853.88	8.9100	4.6120	2069.99	
2.23	1175	1.9458	872.44	8.9100	4.6396	2082.38	
2.23	1200	1.9872	891.01	8.9100	4.6672	2094.77	
2.23	1225	2.0286	909.57	8.9100	4.6948	2107.16	
2.23	1250	2.0700	928.13	8.9100	4.7224	2119.55	
2.23	1275	2.1114	946.69	8.9100	4.7500	2131.94	
2.23	1300	2.1528	965.26	8.9100	4.7776	2144.34	
2.23	1325	2.1942	983.82	8.9100	4.8052	2156.73	
2.23	1350	2.2356	1002.38	8.9100	4.8328	2169.12	
2.63	1375	2.2770	1020.94	12.6500	4.8604	2181.51	Addition of Well # 8
2.63	1400	2.3184	1039.51	12.6500	4.8880	2193.90	0.4 cfs Domestic, 3.34
2.63	1425	2.3598	1058.07	12.6500	4.9156	2206.29	cfs Fire Flow
2.63	1450	2.4012	1076.63	12.6500	4.9432	2218.68	
2.63	1475	2.4426	1095.20	12.6500	4.9709	2231.07	
2.63	1500	2.4840	1113.76	12.6500	4.9985	2243.46	
2.63	1525	2.5254	1132.32	12.6500	5.0261	2255.86	
2.63	1550	2.5668	1150.88	12.6500	5.0537	2268.25	
2.63	1575	2.6082	1169.45	12.6500	5.0813	2280.64	

Rated System Capacity*

Future Submittal

*based upon development test results. Subsequent testing anticipates higher rating

Notes:

1. Equivalent Residential Customer (1 ERC = 2.86 people)

2. Flow requirement of source water supply with no storage in system, based on 1-hr. peak system demand of 1070 gal/ERC, max. day demand of 714 gpd/ERC and mean annual day demand of 281 gpd/ERC.

3. Demand values are based on historic water records for 2004 in Lexington Hills system and are described in the City of Eagle Master Plan Update #1, (February 2006).

4. Fire flow assumed to be 1500 gpm

Declining Balance Worksheet at Projected Use, Chapter 6
City of Eagle Amended Water Master Plan, November 2005

Diversion Rate - Domestic (cfs)	Equivalent Residential Customers (ERC) 1	Peak Flow Demand (cfs) 2	Peak Flow Demand (gpm) 3	Diversion Rate - Domestic & Fire (cfs)	Max Day plus Fire Flow (cfs) 4	Max Day plus Fire Flow (gpm)	Developments
2.23	5	0.0058	2.50	8.9100	3.3457	1501.66	Mosca Seca (Legacy)
2.23	10	0.0111	5.00	8.9100	3.3494	1503.32	Phase 1: 92 ERCs
2.23	15	0.0167	7.50	8.9100	3.3531	1504.99	
2.23	20	0.0223	10.00	8.9100	3.3568	1506.65	
2.23	25	0.0279	12.50	8.9100	3.3605	1508.32	
2.23	50	0.0557	25.00	8.9100	3.3791	1516.64	
2.23	75	0.0836	37.50	8.9100	3.3976	1524.97	
2.23	100	0.1114	50.00	8.9100	3.4162	1533.29	
2.23	125	0.1393	62.50	8.9100	3.4347	1541.62	Eaglefield
2.23	150	0.1671	75.00	8.9100	3.4533	1549.94	Phase 1: 116 ERCs
2.23	175	0.1950	87.50	8.9100	3.4718	1558.27	
2.23	200	0.2228	100.00	8.9100	3.4904	1566.59	
2.23	225	0.2507	112.50	8.9100	3.5089	1574.92	
2.23	250	0.2785	125.00	8.9100	3.5275	1583.24	
2.23	275	0.3064	137.50	8.9100	3.5460	1591.57	Mosca Seca (Legacy)
2.23	300	0.3342	150.00	8.9100	3.5646	1599.89	Phase 2: 150 ERCs
2.23	325	0.3621	162.50	8.9100	3.5831	1608.22	
2.23	350	0.3899	175.00	8.9100	3.6017	1616.54	
2.23	375	0.4178	187.50	8.9100	3.6202	1624.87	Eaglefield
2.23	400	0.4456	200.00	8.9100	3.6388	1633.19	Phase 2: 112 ERCs
2.23	425	0.4735	212.50	8.9100	3.6573	1641.52	
2.23	450	0.5013	225.00	8.9100	3.6759	1649.84	
2.23	475	0.5292	237.50	8.9100	3.6944	1658.17	
2.23	500	0.5570	250.00	8.9100	3.7130	1666.49	
2.23	525	0.5849	262.50	8.9100	3.7315	1674.82	
2.23	550	0.6127	275.00	8.9100	3.7501	1683.14	
2.23	575	0.6406	287.50	8.9100	3.7686	1691.47	
2.23	600	0.6684	300.00	8.9100	3.7872	1699.79	
2.23	625	0.6963	312.50	8.9100	3.8057	1708.12	
2.23	650	0.7241	325.00	8.9100	3.8243	1716.44	
2.23	675	0.7520	337.50	8.9100	3.8428	1724.77	
2.23	700	0.7798	350.00	8.9100	3.8613	1733.09	
2.23	725	0.8077	362.50	8.9100	3.8799	1741.42	
2.23	750	0.8355	375.00	8.9100	3.8984	1749.74	
2.23	775	0.8634	387.50	8.9100	3.9170	1758.07	
2.23	800	0.8912	400.00	8.9100	3.9355	1766.39	
2.23	825	0.9191	412.50	8.9100	3.9541	1774.72	
2.23	850	0.9469	425.00	8.9100	3.9726	1783.04	
2.23	875	0.9748	437.50	8.9100	3.9912	1791.37	
2.23	900	1.0026	450.00	8.9100	4.0097	1799.69	
2.23	925	1.0305	462.50	8.9100	4.0283	1808.02	
2.23	950	1.0583	475.00	8.9100	4.0468	1816.34	
2.23	975	1.0862	487.50	8.9100	4.0654	1824.67	
2.23	1000	1.1140	500.00	8.9100	4.0839	1832.99	
2.23	1025	1.1419	512.50	8.9100	4.1025	1841.32	
2.23	1050	1.1697	525.00	8.9100	4.1210	1849.64	
2.23	1075	1.1976	537.50	8.9100	4.1396	1857.97	
2.23	1100	1.2254	550.00	8.9100	4.1581	1866.29	
2.23	1125	1.2533	562.50	8.9100	4.1767	1874.62	
2.23	1150	1.2811	575.00	8.9100	4.1952	1882.94	
2.23	1175	1.3090	587.50	8.9100	4.2138	1891.27	
2.23	1200	1.3368	600.00	8.9100	4.2323	1899.59	
2.23	1225	1.3647	612.50	8.9100	4.2509	1907.92	
2.23	1250	1.3925	625.00	8.9100	4.2694	1916.24	
2.23	1275	1.4204	637.50	8.9100	4.2880	1924.57	
2.23	1300	1.4482	650.00	8.9100	4.3065	1932.89	
2.23	1325	1.4761	662.50	8.9100	4.3250	1941.22	
2.23	1350	1.5039	675.00	8.9100	4.3436	1949.54	
2.23	1375	1.5318	687.50	8.9100	4.3621	1957.87	
2.23	1400	1.5596	700.00	8.9100	4.3807	1966.19	
2.23	1425	1.5875	712.50	8.9100	4.3992	1974.52	
2.23	1450	1.6153	725.00	8.9100	4.4178	1982.84	
2.23	1475	1.6432	737.50	8.9100	4.4363	1991.17	
2.23	1500	1.6710	750.00	8.9100	4.4549	1999.49	
2.23	1525	1.6989	762.50	8.9100	4.4734	2007.82	
2.23	1550	1.7267	775.00	8.9100	4.4920	2016.14	
2.23	1575	1.7546	787.50	8.9100	4.5105	2024.47	
2.23	1600	1.7824	800.00	8.9100	4.5291	2032.79	
2.23	1625	1.8103	812.50	8.9100	4.5476	2041.12	
2.23	1650	1.8381	825.00	8.9100	4.5662	2049.44	
2.23	1675	1.8660	837.50	8.9100	4.5847	2057.77	
2.23	1700	1.8938	850.00	8.9100	4.6033	2066.09	
2.23	1725	1.9217	862.50	8.9100	4.6218	2074.42	
2.23	1750	1.9495	875.00	8.9100	4.6404	2082.74	
2.23	1775	1.9774	887.50	8.9100	4.6589	2091.07	
2.23	1800	2.0052	900.00	8.9100	4.6775	2099.39	
2.23	1825	2.0331	912.50	8.9100	4.6960	2107.72	
2.23	1850	2.0609	925.00	8.9100	4.7146	2116.04	
2.23	1875	2.0888	937.50	8.9100	4.7331	2124.37	
2.23	1900	2.1166	950.00	8.9100	4.7517	2132.69	
2.23	1925	2.1445	962.50	8.9100	4.7702	2141.02	
2.23	1950	2.1723	975.00	8.9100	4.7888	2149.34	
2.23	1975	2.2002	987.50	8.9100	4.8073	2157.67	
2.23	2000	2.2280	1000.00	8.9100	4.8258	2165.99	

Future Submittal

Rated System Capacity *

*based upon development test results. Subsequent testing anticipates higher rating

Notes:

1. Equivalent Residential Customer (1 ERC = 2.50 people)

2. Flow requirement of source water supply with no storage in system, based on 1-hr. peak system demand of 720 gal/ERC, max. day demand of 480 gpd/ERC and mean annual day demand of 300 gpd/ERC.

3. Demand values are based on comparable water records for 2004 in adjacent cities with pressurized irrigation and are described chapter 6 of the City of Eagle Master Plan, Volume 1, November, 2005.

4. Fire flow assumed to be 1,500 gallons per minute

ADDENDUM A to Water Master Plan Appendix G
10-22-07

APPENDIX G – ADDENDUM:

Service Peaks for Small Water Systems:

For analysis of community water systems servicing town with populations of 1,000 or more, it is adequate to project the average daily peak flow as 1.70 times the average flow, and the yearly peak hour flow as 1.7 times the average daily peak. This puts the peak hour factor at 2.89 times the average daily flow. Comparing to DEQ standards, for an average supply of 100 gpcd and 2.8 persons per house, this would require an average flow of 280 gpcd and a design peak flow of 810 gpcd (280 x 2.89 = 809.2). IDEQ rules require a system delivery capacity of 800 gpd per house, excluding fire and amenity flows, which matches the use of 1.7 for each component of peaking very closely. For very small community systems, these factors do not accurately predict the peaks that may occur due to coincidence of withdrawals. In a system of 20 houses, for instance, average flow is 3.84 gpm. A single house where, for instance, an automatic washer, a shower and a kitchen sink are all drawing water might exert a demand of 5 gpm: about half the value of 1.7 x 1.7 x 3.84 = 11.24 gpm. More than two houses coinciding in demand would exceed the peak that these larger-system factors would predict. However, realistic peak flows can be computed by applying statistical theory.

A statistically-based projection assuming individual house peak demand of 5 gpm, and probability of peak-hour-of-peak-day demand of 0.00001 (actual probability would be 1/8,640 = 0.00021, so this is conservative) gives peak-to-average factors as follows:

> The general formula for peak values by statistical theory is $x = m + d$, where x is the maximum value, m is the mean (or weighted mean) value, and d is a theoretical "deviation" term, equal to constant coefficient multiplied by the "standard deviation." For a probability of 100,000 to 1 that a predicted peak will not be exceeded, the deviation coefficient is 4.4. Since the "deviation" that is of concern is the excess of peak flow over "daily average" peak, a weighting coefficient of 1.7 is used in the "mean" term.
>
> The standard deviation is expressed as $\sqrt{np(1-p)}$ where n is the number of items possible (here, the number of homes), and np is the probability that any item is "on."

The probability "p" that any house is withdrawing water at the assumed 5 gpm is (q-daily average / (q-peak x 24 hr x 60 min)).

Collecting all terms, the formula for peak-hour flow for small systems becomes:

$$qp = \frac{1.7n(qd)}{1{,}440} + 4.4\left(\sqrt{np\left[\left(\frac{qd}{1{,}440qi}\right)\left(1-\frac{qd}{1440qi}\right)\right]}\right)qi \qquad \text{in gpm}$$

For typical modern housing units:

$$qd = 280 gal/da$$
$$qi = 5 gpm$$

Solutions for various system sizes:

$$\left(p = \frac{qd}{1440qi} = 0.0389\right)$$

n	q ave gpm	σ	qp gpm	qp / q ave
5	0.972	0.4322	10.48	10.78
10	1.944	0.6114	16.76	8.62
20	3.889	0.8646	25.63	6.59
50	9.722	1.3671	46.60	4.79
100	19.444	1.9333	75.58	3.89
200	38.889	2.7341	126.26	3.25

Inspecting this table, it is seen that the peak-to-average factor at 200 homes becomes about the same as the general factor of 2.89 assumed for larger systems. Hence, systems in a full range of sizes can be designed using this statistical approval for 200 homes or less, and the factors of 1.7 and 2.89 for larger systems. Essentially, the variation of coincidence becomes a minor issue at or above the 200-house size.

APPENDIX H

SAMPLE TYPE CODE
S - Routine Sample
P - Repeat sample (at original tap)
E - Enforcement (chain of custody)
U - Upstream repeat
D - Downstream repeat
X -Other Repeat
W - Untreated
V - Invalidated by Lab
C - Construction / Special

ANALYTICAL LABORATORIES, INC.

ID00020
1804 N. 33rd Street
Boise, Idaho 83703
1-800-574-6773
1-208-342-5515
www.analyticallaboratories.com

Public Water Supply X Private Water Supply Other_____

NAME OF WATER SYSTEM	COUNTY	PWS
	ADA	

REPORT RESULTS TO:

STEVE VANDERMEER
PIPE, INC
455 S KINGS ROAD
NAMPA, ID 83687

DATE RECEIVED	1/29/2008
TIME RECEIVED	9:10
DATE ANALYZED	1/29/2008
TIME ANALYZED	14:00

SEND ADDITIONAL COPIES TO: HOLLADAY ENG. - ERIC

IF RETEST, ORIGINAL SAMPLE DATE

Phone	Ext	Fax	email	CHILLED 10 C	[X] YES [ ] NO
(208) 468-2503		(208) 466-3658			

COLLECTED BY: PIPE INC TRANSPORTED BY: MDW

SAMPLE TYPE	COLLECTION DATE/TIME	Sampling Location	Cl res	TOTAL COLIFORMS SM 9223	FECAL COLIFORMS SM 9221	E. COLI SM 9223	HPC SM 9215
P	1/29/2008 8:33	LAB# 0802700 MOSCA SECA/EAGLE PUMPHOUSE TAP		ABSENCE		ABSENCE	

REMARKS:

ANALYST: LM
DATE PRINTED: 1/30/2008

ANALYTICAL METHODS

Total Coliforms

SM 9222 Membrane Filter Technique, Parts 909 and 909A, Standard Methods...16th ed.,1985

SM 9221 Mutiple Tube Fermentation , Parts 908 and 908A, and 908B, Standard Methods...16th

SM 9223 MMO-MUG Test Per 40 CFR141.21(f)(3)(IV)

HPC

Pour Plate, Part 907, Standard Methods . 16th ed., 1

Fecal Coliforms

Membrane Filter Technique, Parts 908C., Standard Methods...16th ed.,1985

Membrane Filter Technique, Parts 909 and 909A, Standard Methodx...16th ed.,1985

E. coli

MUO Test Per 141.21(f)(3) and 40 CFR 141 21(f)(6)(iii)

Analytical Laboratories, Inc.

B - M 1/30/08

Laboratory Supervisor Date

SAMPLE TYPE CODE
S - Routine Sample
P - Repeat sample (at original tap)
E - Enforcement (chain of custody)
U - Upstream repeat
D - Downstream repeat
X -Other Repeat
W - Untreated
V - Invalidated by Lab
C - Construction / Special

ANALYTICAL LABORATORIES, INC.

ID00020
1804 N. 33rd Street
Boise, Idaho 83703
1-800-574-5773
1-208-342-5515
www.analyticallaboratories.com

Public Water Supply X Private Water Supply Other_____

NAME OF WATER SYSTEM	COUNTY	PWS
MOSCASECA/EAGLE	ADA	

REPORT RESULTS TO:

STEVE VANDERMEER
PIPE, INC
455 S KINGS ROAD
NAMPA, ID 83687

DATE RECEIVED	1/28/2008
TIME RECEIVED	16:20
DATE ANALYZED	1/28/2008
TIME ANALYZED	17:15
IF RETEST, ORIGINAL SAMPLE DATE	

SEND ADDITIONAL COPIES TO: HOLIDAY ENGINEERING - ERIC

Phone (208) 466-2503 Ext Fax (208) 466-3658 email CHILLED 10 C [X] YES [ ] NO

COLLECTED BY: MIKE W TRANSPORTED BY: MIKE W

SAMPLE TYPE	COLLECTION DATE/TIME	Sampling Location	Cl res	TOTAL COLIFORMS SM 9223	FECAL COLIFORMS SM 9221	E. COLI SM 9223	HPC SM 9215
P	1/28/2008 15:20	LAB# 0802667 CLEARFIELD CRT		ABSENCE		ABSENCE	
P	1/28/2008 15:23	LAB# 0802668 ATHENS CT		ABSENCE		ABSENCE	
P	1/28/2008 15:24	LAB# 0802669 EAGLE LANDING CT		ABSENCE		ABSENCE	
P	1/28/2008 15:27	LAB# 0802670 OLYMPIC PARKWAY CT		ABSENCE		ABSENCE	
P	1/28/2008 15:30	LAB# 0802671 OLYMPIC PARK EYE BROW		ABSENCE		ABSENCE	
P	1/28/2008 15:33	LAB# 0802672 SEVEN GOLDS		ABSENCE		ABSENCE	
P	1/28/2008 15:36	LAB# 0802673 FOUNDERS DRIVE		ABSENCE		ABSENCE	

REMARKS:

ANALYST: TJR
DATE PRINTED: 1/29/2008

ANALYTICAL METHODS

Total Coliforms

SM 9222 Membrane Filter Technique, Parts 909 and 909A, Standard Methods....16th ed.,1985

SM 9221 Multiple Tube Fermentation, Parts 908 and 908A, and 908B, Standard Methods. . 16th

SM 9223 MMO-MUG Test Per 40 CFR141.21(f)(3)(iv)

HPC
Pour Plate, Part 907, Standard Methods.... 16th ed., 1

Fecal Coliforms

Membrane Filter Technique, Parts 908C., Standard Methods....16th ed.,1985

Membrane Filter Technique, Parts 909 and 909A, Standard Methods....16th ed.,1985

E. coli

MUG Test Per 141.214(a)(7) and 40 CFR 141.21(f)(6)(iii)

Analytical Laboratories, Inc.

B. M. 1/30/8

Laboratory Supervisor Date

ALCHEM LABORATORIES

Alchem Laboratories, Inc.
104 West 31st Street
Boise, Idaho 83714
Phone (208) 336-1172
FAX (208) 336-7124
Water, Soil and Waste Water Analysis

LABORATORY REPORT

CHALLENGER COMPANIES
1415 MADISON AVE.
NAMPA, IDAHO 83687

ATTENTION:

DATE COLLECTED 01/11/2008
TIME COLLECTED 1:08
DATE RECEIVED 01/11/2008
DATE REPORTED 01/14/2008
SUBMITTED : BRUCE HEROLD

SOURCE -: EAGLE FIELD SUBDIVISION WELL HOUSE

LAB SAMPLE NUMBER - 24562

Results reported unless noted: (Chemistry Analysis as mg/l) (Bacteria as organisms/100 ml)

ANALYSIS	RESULTS	DATE ANALYZED	ANALYST
TOTAL COLIFORM	ABSENT	01/11/2008	CE

COMMENTS: FAX 461-3873
NO COLIFORM BACTERIA WERE FOUND IN SAMPLE.

This report for the exclusive use of the client(s) to whom it is addressed. Its disclosure to others for use in advertising is not authorized. These results refer only to the specific sample tested and no interpretation is intended or implied.

Suzanne Myers
Suzanne Myers, Laboratory Manager

Post-it® Fax Note 7671	Date 1-14-08	# of pages ▶ 1
To Eric / Kasey	From Bruce	
Co./Dept. Holladay Eng	Co. Challenger	
Phone # FAX - 853-2554	Phone #	
Fax # 642-2159	Fax #	

Post-it® Fax Note 7671	Date 1-14-08	# of pages ▶ 1
To Peter Harris	From Bruce	
Co./Dept.	Co. Challenger	
Phone #	Phone #	
Fax # 939-3290	Fax #	

Please fill out Client and Sampling Information completely. (Shaded Areas)

Water System Name		PWS ID No.
Eaglefield #1		
Collector	Date Collected	County

ALCHEM LABORATORIES

Alchem Laboratories, Inc.
104 West 31st Street
Boise, Idaho 83714
Phone (208) 336-1172

Lab ID: 00102 ID016

Report Results To:

Name		
Brown Construction		
Address		
Fax 466 4630		
City	State	Zip Code

☐ Public Water Supply ☐ Private Water Supply ☐ Other: ____

Name of State Agency requiring copies

Coliform Bacteria Results

Sampling Information:

Sample Type Code	Sampling Location	Time Collected	Chlorine Residual PPM	Original* Sample Date	Lab Sample Number	TOTAL COLIFORMS		FECAL COLIFORMS		ESCHERICHIA COLI.		HPC	
						Method Code	(P)resent (A)bsent #100 ml	Method Code	(P)resent (A)bsent #100 ml	Method Code	(P)resent (A)bsent #100 ml	Method Code	CFU/ml.
L	W Burning Dr	1:27			24919	MMO	A						
C	N FH	1:37			24920		A						

CLIENT

Sample Type Codes:

S - Routine Sample
P - Repeat Sample (at original tap)
E - Enforcement (chain of custody required)
U - Upstream Repeat
D - Downstream Repeat
O - Other Repeat
W - Untreated (source)
V - Invalidated by lab
C - Construction/Special

*For PWS only, if this is a repeat sample, mark the date of the **ORIGINAL POSITIVE SAMPLE.**

Remarks ____

Date/Time Received 1-24-08 BC 3:00

Copy Distribution:

WHITE - Client YELLOW - Health District/DEQ Region PINK - Laboratory

Analyst C. EDGERTON Date Analyzed 1-24-08

Supervisor [signature] Date Reported 1-25-08

Please fill out Client and Sampling Information completely. (Shaded Areas)

Water System Name		PWS ID No.
Eaglefield #1		
Collector	Date Collected	County
Donnie / Justin	1-24-08	Ada

ALCHEM LABORATORIES

Alchem Laboratories, Inc.
104 West 31st Street
Boise, Idaho 83714
Phone (208) 336-1172

Lab ID: 00102 ID016

Report Results To:

Name		
Brown Construction		
Address		
Fax 466 4631		
City	State	Zip Code

☐ Public Water Supply ☐ Private Water Supply ☐ Other: _____

Name of State Agency requiring copies

Coliform Bacteria Results

Sampling Information:

Sample Type Code	Sampling Location	Time Collected	Chlorine Residual PPM	Original* Sample Date	Lab Sample Number	TOTAL COLIFORMS		FECAL COLIFORMS		ESCHERICHIA COLI.		HPC	
						Method Code	(P)resent (A)bsent #100 ml	Method Code	(P)resent (A)bsent #100 ml	Method Code	(P)resent (A)bsent #100 ml	Method Code	CFU/int.
C	Entry B/O S Stub	105			24913	WMMO	P			WMMO	A		
C	N Baxter Way FH	106			24914		P			WMMO	A		
C	W Brummier B/O	111			24915		A						
C	N Vandries FH	116			24916		A						
C	W Brummier FH	1:20			24917		P			WMMO	A		
C	W Demison Ct FH	1:25			24918		A						

Sample Type Codes:

S - Routine Sample
P - Repeat Sample (at original tap)
E - Enforcement (chain of custody required)
U - Upstream Repeat
D - Downstream Repeat
O - Other Repeat
W - Untreated (source)
V - Invalidated by lab
C - Construction/Special

*For PWS only, if this is a repeat sample, mark the date of the **ORIGINAL POSITIVE SAMPLE.**

Remarks _____

Date/Time Received 1-24-08 Bc 3°

Copy Distribution:

WHITE - Client YELLOW - Health District/DEQ Region PINK - Laboratory

Analyst C. EDGERTON

Date Analyzed 1-24-08

Supervisor _____

Date Reported 1-25-08

Please fill out Client and Sampling Information completely. (Shaded Areas)

Water System Name		PWS ID No.
Eagle Field #1		
Collector	Date Collected	County
Justin / Dennis	1-16-08	Ada

ALCHEM LABORATORIES

Alchem Laboratories, Inc.
104 West 31st Street
Boise, Idaho 83714
Phone (208) 336-1172

Lab ID: 00102 ID016

Report Results To:

Name: Brown Construction

Address: Fax 466 4631

City | State | Zip Code

☒ Public Water Supply ☒ Private Water Supply ☐ Other:

Name of State Agency requiring copies

Coliform Bacteria Results

Sampling Information:

Sample Type Code	Sampling Location	Time Collected	Chlorine Residual PPM	Original* Sample Date	Lab Sample Number	TOTAL COLIFORMS Method Code	TOTAL COLIFORMS (P)resent (A)bsent #100 ml	FECAL COLIFORMS Method Code	FECAL COLIFORMS (P)resent (A)bsent #100 ml	ESCHERICHIA COLI. Method Code	ESCHERICHIA COLI. (P)resent (A)bsent #100 ml	HPC Method Code	HPC CFU/int.
C	W During FH	1255			24717	WMMO	A						
C	N FH	105			24718		A						

Sample Type Codes:

S - Routine Sample
P - Repeat Sample (at original tap)
E - Enforcement (chain of custody required)
U - Upstream Repeat
D - Downstream Repeat
O - Other Repeat
W - Untreated (source)
V - Invalidated by lab
C - Construction/Special

*For PWS only, if this is a repeat sample, mark the date of the **ORIGINAL POSITIVE SAMPLE.**

Remarks

Date/Time Received 1-16-08 3C 225

Analyst C. EDGERTON

Date Analyzed 1-16-08

Supervisor [signature]

Date Reported 1-17-08

Copy Distribution:

WHITE - Client YELLOW - Health District/DEQ Region PINK - Laboratory

CLIENT

Please fill out Client and Sampling Information completely. (Shaded Areas)

Water System Name		PWS ID No.
Eagle Field #1		
Collector	Date Collected	County
Justin / Donnie	1-16-08	Ada

ALCHEM LABORATORIES

Alchem Laboratories, Inc.
104 West 31st Street
Boise, Idaho 83714
Phone (208) 336-1172

Lab ID: 00102 ID016

Report Results To:

Name		
Brown Construction		
Address		
Fax 466 4631		
City	State	Zip Code

☒ Public Water Supply ☒ Private Water Supply ☐ Other: ____

Name of State Agency requiring copies

Coliform Bacteria Results

Sampling Information:

Sample Type Code	Sampling Location	Time Collected	Chlorine Residual PPM	Original* Sample Date	Lab Sample Number	TOTAL COLIFORMS Method Code	TOTAL COLIFORMS (P)resent (A)bsent #100 ml	FECAL COLIFORMS Method Code	FECAL COLIFORMS (P)resent (A)bsent #100 ml	ESCHERICHIA COLI. Method Code	ESCHERICHIA COLI. (P)resent (A)bsent #100 ml	HPC Method Code	HPC CFU/ml.
C	Entry B/O S Stub	12:25			24711	WMMO	P			WMMO	A		
C	N Baxter Way FH	12:28			24712		P				A		
C	W Brumneir B/O	12:34			24713		P				A		
C	N Vandriers Way FH	12:38			24714		A						
C	W Brumneir FH	12:40			24715		P			WMMO	A		
C	Demison Ct	1251			24716		A						

Sample Type Codes:

S - Routine Sample
P - Repeat Sample (at original tap)
E - Enforcement (chain of custody required)
U - Upstream Repeat
D - Downstream Repeat
O - Other Repeat
W - Untreated (source)
V - Invalidated by lab
C - Construction/Special

*For PWS only, if this is a repeat sample, mark the date of the **ORIGINAL POSITIVE SAMPLE.**

Remarks ____

Date/Time Received 1:16 08 3C 225

Copy Distribution:

WHITE - Client YELLOW - Health District/DEQ Region PINK - Laboratory

Analyst C. EDGERTON Date Analyzed 1-16-08

Supervisor [signature] Date Reported 1-17-08

CLIENT

CLEARWATER OPERATIONS, INC.

616 S. WASHINGTON AVENUE
EMMETT, IDAHO 83617

TELEPHONE: 208-365-5385
FAX: 208-365-5389

Sample Schedule
Eaglefield and Legacy Wells
Eagle, Idaho

Sample Parameter	Location	Frequency	Collect by date
Bacteria	Eaglefield and Legacy 1 distribution site each	Quarterly	03/31/2008
Nitrate / Nitrate	Eaglefield and Legacy 1 distribution site each	Quarterly	03/31/2008
Inorganic	Eaglefield and Legacy discharge to systems	Quarterly	03/31/2008
Organics	Eaglefield and Legacy discharge to systems	Quarterly	03/31/2008
Lead and Copper	Eaglefield and Legacy 5 distribution sites each	Bi-annual	06/30/2008
Radionuclicides	Eaglefield and Legacy discharge to systems	Quarterly	03/31/2008

Sample schedules are based on an acceptance date of January 9, 2007 for the wells to be placed in service. Scheduled collection dates may vary based on guidance and recommendations provided by Idaho D.E.Q., the number of active services, or the in-service date for the individual wells.

City of Eagle
Western Area Water System Modeling Summary

April 14, 2008

The western area water system, currently consisting of the Legacy and Eaglefield developments, has been modeled to estimate available fire flow at the maximum day demand conditions. In order to meet the redundancy requirements, the modeling has been performed with the largest pump (Well 5 vertical turbine) turned off. This simulates the pump being out of service during the modeled demand scenario.

The current system contains two sources of supply, Wells 4 and 5. Each well has a vertical turbine pump as the primary pump. However, both wells are artesian and each has an artesian pump station consisting of three booster pumps. The booster pumps allow the artesian flow to be utilized to meet low to mid flow demands that are not able to be efficiently met by the high flow vertical turbine well pumps without excessive pump cycling. Thus, even with the largest pump (Well 5 vertical turbine) out of service, the booster pumps at Well 5 could still be operated and could meet a portion of the overall system demand. The control system, which controls operation of the pumps at each site to meet a local pressure set point at each well site, does not allow the artesian booster pumps to operate when the vertical turbine pump is on at the individual well site. However, the Well 5 artesian booster pumps can operate simultaneously with the Well 4 vertical turbine.

To determine the estimated minimum available fire flow value for the system at maximum day demand conditions and with the largest pump out of service, two scenarios were modeled. The first is the Well 4 vertical turbine pump being the only pump in operation. This results in the lowest available fire flow value and is the most conservative in that it is very unlikely that Well 4 vertical turbine would be the only operational pump during a fire flow event at maximum day demand. The minimum available fire flow value at the worst case fire hydrant (FH-234 on a dead end main at the north end of Legacy) is 1,659 gpm with a minimum system pressure of 20 psi. In this case the minimum system pressure occurs at the fire hydrant.

The second scenario modeled was the Well 4 vertical turbine pump in operation in combination with the Well 5 artesian booster pump system. Under this scenario, the minimum available fire flow value at the worst case fire hydrant (again FH-234) is 1,780 gpm with a minimum system pressure of 20 psi. In this case the minimum system pressure occurs at the fire hydrant.

Scenario	Pumps On	Minimum Available Fire Flow at 20 psi	Minimum Available Fire Flow Node	System Maximum Day Demand	Pump Output Summary
1	Well 4 Vertical Turbine	1,659 gpm	FH-234	262 gpm	Well 4 V.T. = (1,921 gpm, 162' head, 62.1 psi outlet pressure)
2	Well 4 Vertical Turbine + Well 5 Artesian Boosters	1,780 gpm	FH-234	262 gpm	Well 4 V.T. = (1,883 gpm, 170' head, 65.6 psi outlet pressure) Well 5 Boosters = (159 gpm, 135' head, 58.5 psi outlet pressure)

We have inputted the actual pump curves for each pump in the system so the model contains the "as-built" components. Since this is a totally closed system with no elevated storage, the model is less forgiving because all flow and pressure is provided by the pumps. A model with

elevated storage is much more stable because excess flow can dump into the storage or shortfalls can be met by flowing out of storage without huge pressure swings. When a model is run with a fire flow calculation, the pumps adjust to meet the normal demand condition (max day in this case) and then the model iterates and solves for the available fire flow at each node, such that the system pressure does not drop below 20 psi at any point. There is a huge flow difference between maximum day demand and fire flow in this particular system. Also, the software used for this model has certain limitations, especially when we have multiple variable speed pumps in parallel with different pump curves. We have run the "Fire Flow Report" and have noticed what is called a "fixed speed override" message on the main Well 4 pump. The result is that the model calculates available fire flow values that are slightly higher than the limit that we have placed on the pump. We know that calculated fire flow values are slightly high using the automated calculation method, but the automated fire flow calculation does give an accurate representation of the relative magnitude of the fire flow values at each node. Therefore, we know that FH-234 is the worst case fire hydrant (produces the lowest available fire flow). We did not submit the "Fire Flow Report" with this most recent output because we know the calculated fire flow values on the report are higher than actual and the manual check at the worst case node is reliable.

As a check to get around the "fixed speed override" issue, we simply manually inputted a fire flow demand at that node (we could input a fire flow at any node we want, but the worst case node establishes the minimum available fire flow, which is what we are interested in) and check the system pressure to make sure that it does not fall below 20 psi. In Scenario 2, a fire flow value of 1,780 gpm at FH-234 resulted in a minimum system pressure of 20 psi.

On April 14, 2008, field flow testing was performed at FH-234 to verify model results. The nearest fire hydrant, FH-235 was used to measure static and residual pressures during the flow test at FH-234. In addition, the residual pressure at FH-234 was measured while flowing. During the flow test, production flowmeter readings were recorded at both Well 4 and Well 5 along with the corresponding system pressure readings at the well sites. A calibration scenario was created in the model to account for zero demand in the system at the current time.

Parameter	Field Measured	Model Predicted
Residual Pressure at Flow Hydrant (FH-234)	14 psi avg. (12 psi on one gauge, 16 psi on another)	14.5 psi
Residual Pressure at Upstream Hydrant (FH-235)	38 psi	37.9 psi
Well 4 Vertical Turbine Production	1600 gpm	1598 gpm
System Pressure at Well 4	62 psi	60.6 psi
Well 5 Booster Pumps Production	240 gpm	242 gpm
System Pressure at Well 5	55 psi	54.7 psi

1840 > 1762 ok

City of Eagle Municipal Water System
Western Expansion Area

Well #4 Only

April 11, 2008

Scenario: 2006 Max Day

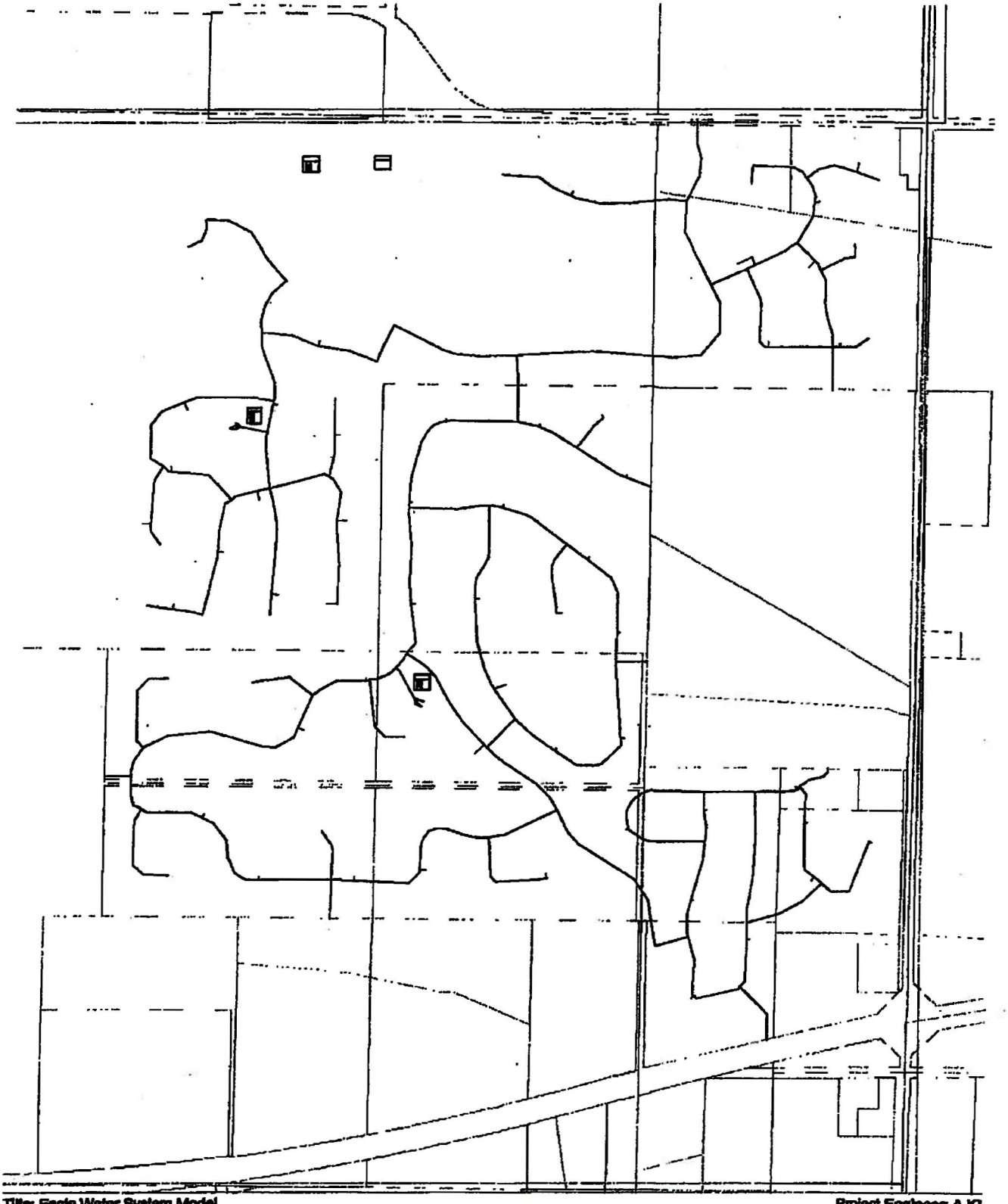

Title: Eagle Water System Model
Project Engineer: AJG
I:\...\legacy & eaglefield\legacy & eaglefield.wcd
Holladay Engineering
WaterCAD v7.0 [07.00.061.00]
04/11/08 12:09:53 PM Bentley Systems, Inc. Haestad Methods Solution Center Watertown, CT 06795 USA +1-203-755-1666
Page 1 of 1

Scenario: 2006 Max Day

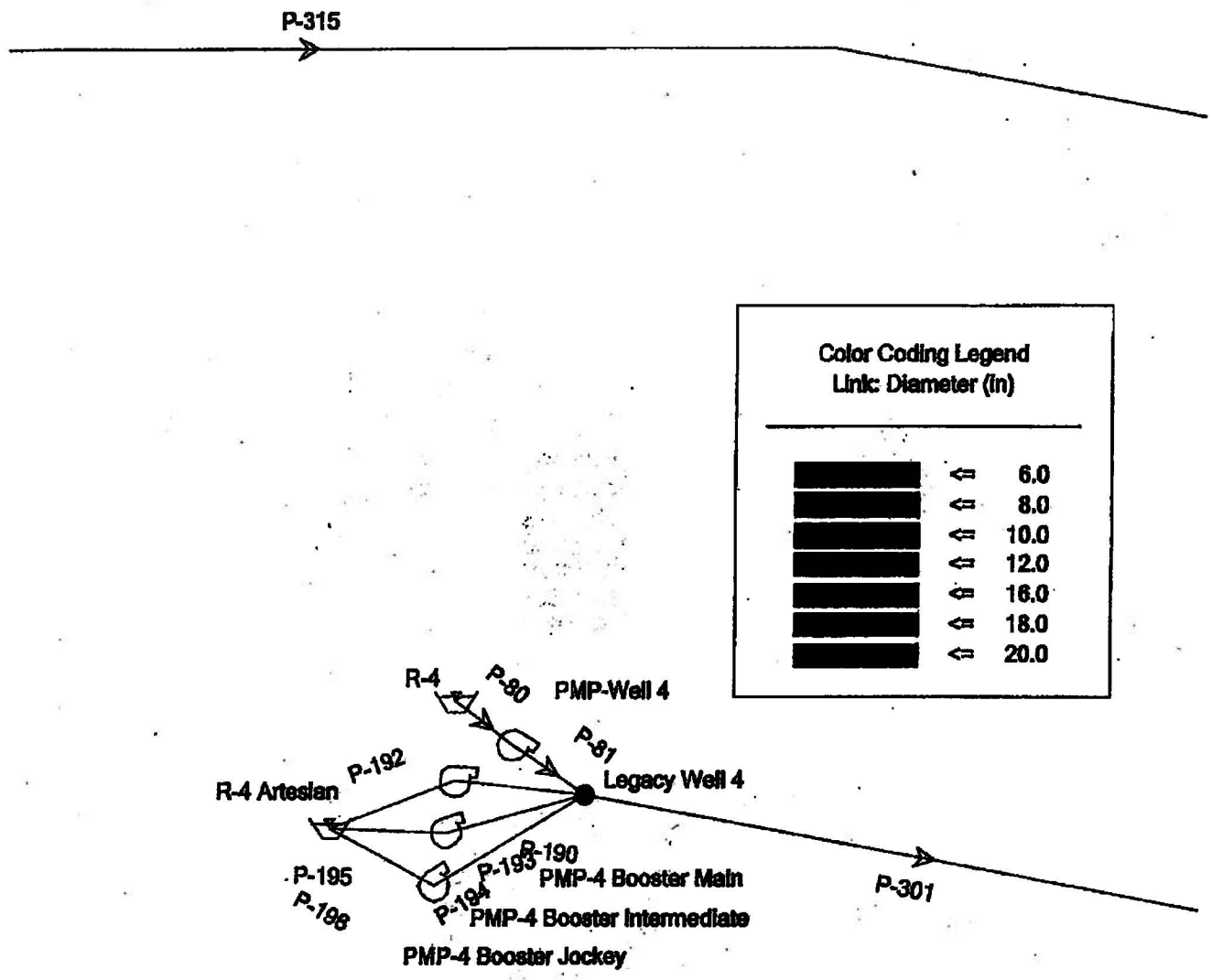

Scenario: 2006 Max Day

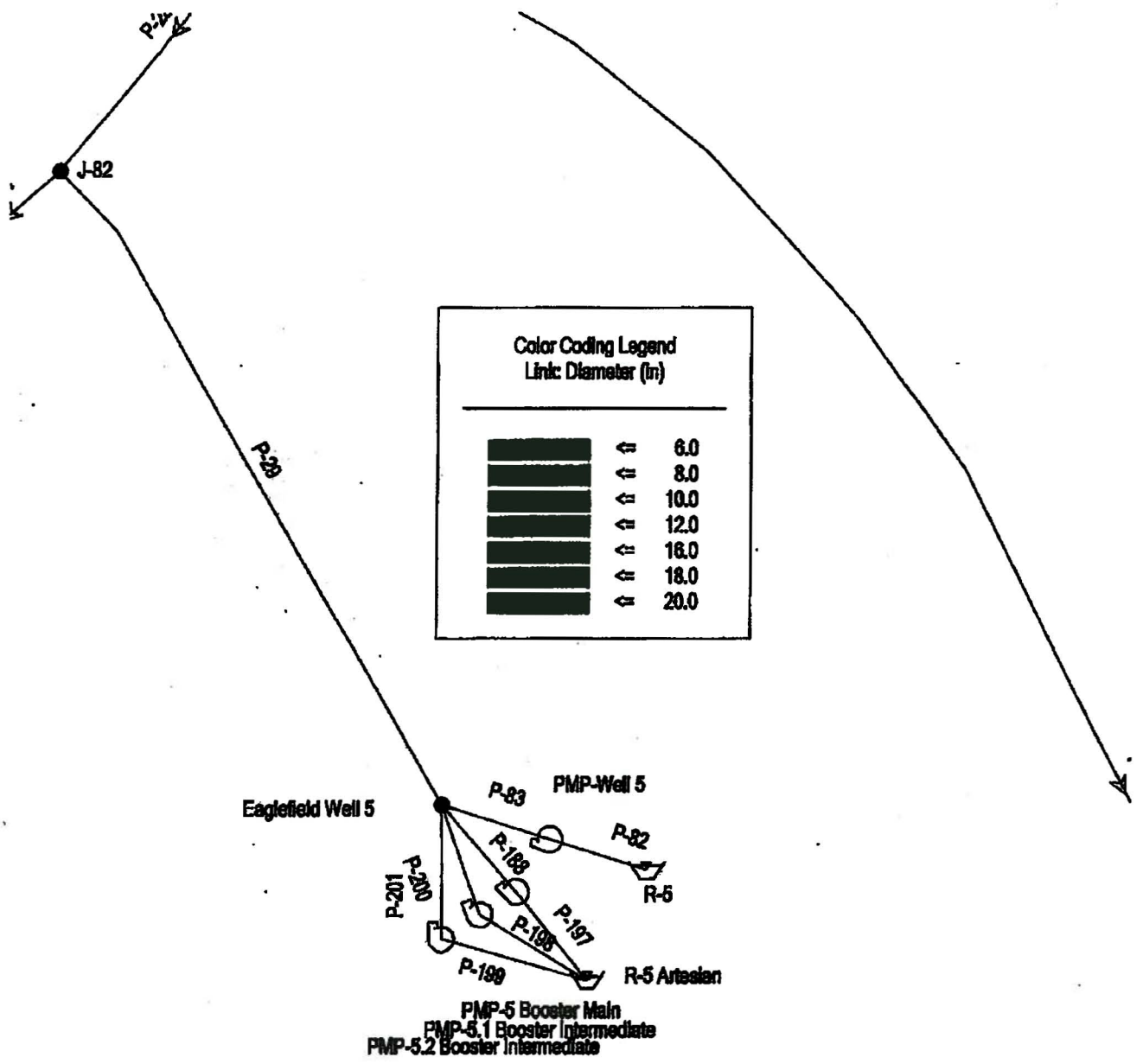

Scenario: 2006 Max Day
Steady State Analysis
Pump Report

Label	Elevation (ft)	Control Status	Discharge (gpm)	Initial Relative Speed Factor	Intake Pump Grade (ft)	Discharge Pump Grade (ft)	Pump Head (ft)	Calculated Water Power (Hp)	Discharge Pump Pressure (psi)	Intake Pump Pressure (psi)
PMP-4 Booster Intermediate	2,513.00	Off	0.00	1.00	2,513.00	2,656.43	0.00	0.00	62.06	0.00
PMP-4 Booster Jockey	2,513.00	Off	0.00	1.00	2,513.00	2,656.43	0.00	0.00	62.06	0.00
PMP-4 Booster Main	2,513.00	Off	0.00	1.00	2,513.00	2,656.43	0.00	0.00	62.06	0.00
PMP-5 Booster Main	2,516.00	Off	0.00	1.00	2,516.00	2,642.31	0.00	0.00	54.65	0.00
PMP-5.1 Booster Intermedia	2,516.00	Off	0.00	1.00	2,516.00	2,642.31	0.00	0.00	54.65	0.00
PMP-5.2 Booster Intermedia	2,516.00	Off	0.00	1.00	2,516.00	2,642.31	0.00	0.00	54.65	0.00
PMP-Well 4	2,475.00	On	[illegible]	1.00	2,494.90	2,656.56	161.66	78.41	78.55	8.61
PMP-Well 5	2,480.00	Off	0.00	1.00	2,498.00	2,642.31	0.00	0.00	70.23	7.79

Limited to 1,000

Scenario: 2006 Max Day
Steady State Analysis
Junction Report

Label	Elevation (ft)	Zone	Base Flow (gpm)	Type	Pattern	Demand (Calculated) (gpm)	Calculated Hydraulic Grade (ft)	Pressure (psi)
FH-234	2,527.60	A	1,659.00	Demand	Fixed	1,659.00	2,574.66	20.36
J-234	2,527.60	A	4.00	Demand	Fixed	4.00	2,601.19	31.84
FH-232	2,531.40	A	0.00	Demand	Fixed	0.00	2,612.75	35.20
J-232	2,531.40	A	2.00	Demand	Fixed	2.00	2,612.75	35.20
J-231	2,531.00	A	2.00	Demand	Fixed	2.00	2,612.75	35.37
J-233	2,528.10	A	2.50	Demand	Fixed	2.50	2,612.75	36.62
J-235	2,526.10	A	1.00	Demand	Fixed	1.00	2,617.97	39.75
FH-235	2,526.10	A	0.00	Demand	Fixed	0.00	2,617.97	39.75
J-236	2,521.50	A	0.50	Demand	Fixed	0.50	2,627.12	46.70
FH-239	2,521.50	A	0.00	Demand	Fixed	0.00	2,627.90	46.03
J-239	2,521.50	A	3.50	Demand	Fixed	3.50	2,627.90	46.03
FH-237	2,520.50	A	0.00	Demand	Fixed	0.00	2,627.67	46.37
J-237	2,520.50	A	2.00	Demand	Fixed	2.00	2,627.67	46.37
J-238	2,519.60	A	3.00	Demand	Fixed	3.00	2,627.90	46.90
J-240	2,520.80	A	3.50	Demand	Fixed	3.50	2,629.65	47.09
J-242	2,520.00	A	2.50	Demand	Fixed	2.50	2,629.65	47.44
J-243	2,520.00	A	0.00	Demand	Fixed	0.00	2,629.65	47.44
FH-241	2,520.00	A	0.00	Demand	Fixed	0.00	2,629.65	47.44
J-241	2,520.00	A	1.50	Demand	Fixed	1.50	2,629.65	47.44
J-247	2,521.00	A	3.00	Demand	Fixed	3.00	2,632.11	48.07
FH-247	2,521.00	A	0.00	Demand	Fixed	0.00	2,632.11	48.07
FH-244	2,519.50	A	0.00	Demand	Fixed	0.00	2,631.12	48.29
J-244	2,519.50	A	7.00	Demand	Fixed	7.00	2,631.12	48.29
J-246	2,520.10	A	0.00	Demand	Fixed	0.00	2,632.11	48.46
J-245	2,520.00	A	3.50	Demand	Fixed	3.50	2,633.13	48.95
J-250	2,522.00	A	0.00	Demand	Fixed	0.00	2,641.26	51.60
FH-251	2,520.80	A	0.00	Demand	Fixed	0.00	2,641.26	52.12
J-251	2,520.80	A	2.50	Demand	Fixed	2.50	2,641.26	52.12
J-249	2,520.80	A	0.00	Demand	Fixed	0.00	2,641.26	52.12
J-248	2,519.10	A	0.00	Demand	Fixed	0.00	2,641.26	52.85
J-252	2,519.00	A	3.00	Demand	Fixed	3.00	2,641.26	52.90
J-128	2,520.00	L	0.00	Demand	Fixed	0.00	2,642.30	52.91
FH-128	2,520.00	L	0.00	Demand	Fixed	0.00	2,642.30	52.91
J-126	2,520.00	L	0.00	Demand	Fixed	0.00	2,642.30	52.91
J-127	2,520.00	L	0.00	Demand	Fixed	0.00	2,642.30	52.91
FH-126	2,520.00	L	0.00	Demand	Fixed	0.00	2,642.30	52.91
J-193	2,520.00	L	0.00	Demand	Fixed	0.00	2,642.30	52.91
J-112	2,520.00	L	0.00	Demand	Fixed	0.00	2,642.30	52.91
J-116	2,519.20	L	1.00	Demand	Fixed	1.00	2,642.30	53.28
J-122	2,519.00	L	0.00	Demand	Fixed	0.00	2,642.30	53.34
J-123	2,519.00	L	0.00	Demand	Fixed	0.00	2,642.30	53.34
J-124	2,519.00	L	0.00	Demand	Fixed	0.00	2,642.30	53.34
FH-122	2,519.00	L	0.00	Demand	Fixed	0.00	2,642.30	53.34
J-125	2,519.00	L	0.00	Demand	Fixed	0.00	2,642.30	53.34
FH-125	2,519.00	L	0.00	Demand	Fixed	0.00	2,642.30	53.34
J-192	2,519.00	L	0.00	Demand	Fixed	0.00	2,642.30	53.34
FH-113	2,519.00	L	0.00	Demand	Fixed	0.00	2,642.30	53.34
J-113	2,519.00	L	5.50	Demand	Fixed	5.50	2,642.30	53.34
J-115	2,518.60	L	3.00	Demand	Fixed	3.00	2,642.30	53.52
J-120	2,518.50	L	1.00	Demand	Fixed	1.00	2,642.30	53.56
FH-120	2,518.50	L	0.00	Demand	Fixed	0.00	2,642.30	53.56
FH-121	2,518.50	L	0.00	Demand	Fixed	0.00	2,642.30	53.56

Scenario: 2006 Max Day
Steady State Analysis
Junction Report

Label	Elevation (ft)	Zone	Base Flow (gpm)	Type	Pattern	Demand (Calculated) (gpm)	Calculated Hydraulic Grade (ft)	Pressure (psi)
J-121	2,518.50	L	4.00	Demand	Fixed	4.00	2,642.30	53.56
J-72	2,518.50	A	0.00	Demand	Fixed	0.00	2,642.31	53.57
J-70	2,518.10	A	2.00	Demand	Fixed	2.00	2,642.31	53.74
FH-70	2,518.10	A	0.00	Demand	Fixed	0.00	2,642.31	53.74
J-114	2,518.00	L	6.00	Demand	Fixed	6.00	2,642.30	53.78
J-118	2,518.00	L	6.00	Demand	Fixed	6.00	2,642.30	53.78
J-117	2,518.00	L	2.00	Demand	Fixed	2.00	2,642.30	53.78
FH-114	2,518.00	L	0.00	Demand	Fixed	0.00	2,642.30	53.78
J-111	2,518.00	L	12.00	Demand	Fixed	12.00	2,642.30	53.78
J-109	2,518.00	L	5.00	Demand	Fixed	5.00	2,642.30	53.78
FH-64	2,518.00	A	0.00	Demand	Fixed	0.00	2,642.32	53.79
J-64	2,518.00	A	1.00	Demand	Fixed	1.00	2,642.32	53.79
J-61	2,518.00	A	1.00	Demand	Fixed	1.00	2,642.32	53.79
J-65	2,517.60	A	2.00	Demand	Fixed	2.00	2,642.32	53.87
FH-59	2,517.60	A	0.00	Demand	Fixed	0.00	2,642.32	53.96
J-59	2,517.60	A	2.00	Demand	Fixed	2.00	2,642.32	53.96
J-79	2,517.50	A	3.50	Demand	Fixed	3.50	2,642.31	54.00
FH-79	2,517.50	A	0.00	Demand	Fixed	0.00	2,642.31	54.00
J-71	2,517.50	A	2.00	Demand	Fixed	2.00	2,642.31	54.00
FH-60	2,517.50	A	0.00	Demand	Fixed	0.00	2,642.32	54.00
J-60	2,517.50	A	1.00	Demand	Fixed	1.00	2,642.32	54.00
FH-73	2,517.30	A	0.00	Demand	Fixed	0.00	2,642.31	54.09
J-73	2,517.30	A	2.00	Demand	Fixed	2.00	2,642.31	54.09
FH-118	2,517.00	L	0.00	Demand	Fixed	0.00	2,642.30	54.21
J-118	2,517.00	L	7.00	Demand	Fixed	7.00	2,642.30	54.21
FH-110	2,517.00	L	0.00	Demand	Fixed	0.00	2,642.30	54.21
J-110	2,517.00	L	10.00	Demand	Fixed	10.00	2,642.30	54.21
J-108	2,517.00	L	0.00	Demand	Fixed	0.00	2,642.30	54.21
J-106	2,517.00	L	0.50	Demand	Fixed	0.50	2,642.30	54.21
J-69	2,517.00	A	2.50	Demand	Fixed	2.50	2,642.31	54.22
FH-69	2,517.00	A	0.00	Demand	Fixed	0.00	2,642.31	54.22
J-63	2,517.00	A	2.00	Demand	Fixed	2.00	2,642.32	54.22
FH-78	2,516.60	A	0.00	Demand	Fixed	0.00	2,642.31	54.39
J-78	2,516.60	A	2.50	Demand	Fixed	2.50	2,642.31	54.39
FH-62	2,516.60	A	0.00	Demand	Fixed	0.00	2,642.32	54.39
J-62	2,516.60	A	1.50	Demand	Fixed	1.50	2,642.32	54.39
J-68	2,516.50	A	2.00	Demand	Fixed	2.00	2,642.31	54.43
J-107	2,516.50	A	0.50	Demand	Fixed	0.50	2,642.31	54.43
J-158	2,516.50	A	0.00	Demand	Fixed	0.00	2,642.31	54.43
FH-158	2,516.50	A	0.00	Demand	Fixed	0.00	2,642.31	54.43
J-58	2,516.50	A	2.00	Demand	Fixed	2.00	2,642.32	54.44
J-66	2,516.30	A	3.00	Demand	Fixed	3.00	2,642.31	54.52
J-80	2,516.30	A	3.00	Demand	Fixed	3.00	2,642.31	54.52
FH-80	2,516.30	A	0.00	Demand	Fixed	0.00	2,642.31	54.52
J-283	2,516.30	A	0.00	Demand	Fixed	0.00	2,642.32	54.52
FH-105	2,516.00	L	0.00	Demand	Fixed	0.00	2,642.30	54.64
J-105	2,516.00	L	5.00	Demand	Fixed	5.00	2,642.30	54.64
J-76	2,516.00	A	2.00	Demand	Fixed	2.00	2,642.31	54.65
FH-67	2,516.00	A	0.00	Demand	Fixed	0.00	2,642.31	54.65
J-67	2,516.00	A	1.00	Demand	Fixed	1.00	2,642.31	54.65
Eaglefield Well 5	2,516.00	A	0.00	Demand	Fixed	0.00	2,642.31	54.65
FH-74	2,515.50	A	0.00	Demand	Fixed	0.00	2,642.31	54.74

Scenario: 2006 Max Day
Steady State Analysis
Junction Report

Label	Elevation (ft)	Zone	Base Flow (gpm)	Type	Pattern	Demand (Calculated) (gpm)	Calculated Hydraulic Grade (ft)	Pressure (psi)
J-74	2,515.80	A	1.50	Demand	Fixed	1.50	2,642.31	54.74
FH-104	2,515.50	L	0.00	Demand	Fixed	0.00	2,642.30	54.86
J-104	2,515.50	L	2.00	Demand	Fixed	2.00	2,642.30	54.86
J-103	2,515.50	L	4.00	Demand	Fixed	4.00	2,642.30	54.86
J-77	2,515.50	A	4.50	Demand	Fixed	4.50	2,642.31	54.87
FH-77	2,515.50	A	0.00	Demand	Fixed	0.00	2,642.31	54.87
J-57	2,515.50	A	2.00	Demand	Fixed	2.00	2,642.32	54.87
FH-57	2,515.50	A	0.00	Demand	Fixed	0.00	2,642.32	54.87
J-56	2,515.50	A	2.00	Demand	Fixed	2.00	2,642.32	54.87
J-81	2,515.00	A	1.50	Demand	Fixed	1.50	2,642.31	55.08
J-253	2,515.00	A	0.00	Demand	Fixed	0.00	2,642.32	55.09
J-82	2,514.35	A	0.00	Demand	Fixed	0.00	2,642.31	55.38
J-101	2,514.30	L	1.50	Demand	Fixed	1.50	2,642.30	55.38
FH-101	2,514.30	L	0.00	Demand	Fixed	0.00	2,642.30	55.38
J-85	2,514.30	L	4.50	Demand	Fixed	4.50	2,642.31	55.38
J-102	2,514.00	L	5.00	Demand	Fixed	5.00	2,642.30	55.51
FH-102	2,514.00	L	0.00	Demand	Fixed	0.00	2,642.30	55.51
FH-86	2,513.50	L	0.00	Demand	Fixed	0.00	2,642.31	55.73
J-86	2,513.50	L	1.00	Demand	Fixed	1.00	2,642.31	55.73
J-84	2,513.50	L	1.00	Demand	Fixed	1.00	2,642.31	55.73
J-98	2,513.00	L	0.00	Demand	Fixed	0.00	2,642.30	55.94
J-99	2,513.00	L	0.00	Demand	Fixed	0.00	2,642.30	55.94
J-87	2,513.00	L	0.00	Demand	Fixed	0.00	2,642.31	55.95
J-100	2,512.00	L	0.00	Demand	Fixed	0.00	2,642.30	56.38
J-148	2,512.00	L	0.00	Demand	Fixed	0.00	2,642.31	56.38
FH-148	2,512.00	L	0.00	Demand	Fixed	0.00	2,642.31	56.38
J-88	2,512.00	L	0.00	Demand	Fixed	0.00	2,642.31	56.38
J-254	2,516.40	A	1.50	Demand	Fixed	1.58	2,646.08	56.97
FH-97	2,510.00	L	0.00	Demand	Fixed	0.00	2,642.30	57.24
J-97	2,510.00	L	0.00	Demand	Fixed	0.00	2,642.30	57.24
J-91	2,510.00	L	0.00	Demand	Fixed	0.00	2,642.31	57.24
J-89	2,510.00	L	0.00	Demand	Fixed	0.00	2,642.31	57.24
FH-89	2,510.00	L	0.00	Demand	Fixed	0.00	2,642.31	57.24
FH-96	2,508.00	L	0.00	Demand	Fixed	0.00	2,642.30	58.11
J-96	2,508.00	L	0.00	Demand	Fixed	0.00	2,642.30	58.11
J-90	2,508.00	L	0.00	Demand	Fixed	0.00	2,642.31	58.11
J-94	2,508.00	L	0.00	Demand	Fixed	0.00	2,642.31	58.97
J-95	2,508.00	L	0.00	Demand	Fixed	0.00	2,642.31	58.97
J-92	2,508.00	L	0.00	Demand	Fixed	0.00	2,642.31	58.97
J-93	2,508.00	L	0.00	Demand	Fixed	0.00	2,642.31	58.97
J-146	2,508.00	L	0.00	Demand	Fixed	0.00	2,642.31	58.97
FH-146	2,508.00	L	0.00	Demand	Fixed	0.00	2,642.31	58.97
FH-255	2,513.50	A	0.00	Demand	Fixed	0.00	2,650.10	59.10
J-255	2,513.50	A	3.00	Demand	Fixed	3.00	2,650.10	59.10
J-258	2,514.00	A	0.00	Demand	Fixed	0.00	2,652.12	59.76
J-257	2,514.00	A	3.00	Demand	Fixed	3.00	2,652.12	59.76
J-256	2,514.00	A	2.00	Demand	Fixed	2.00	2,652.12	59.76
J-267	2,516.70	A	2.00	Demand	Fixed	2.00	2,655.20	59.92
J-259	2,513.50	A	0.00	Demand	Fixed	0.00	2,652.12	59.97
FH-269	2,515.00	A	0.00	Demand	Fixed	0.00	2,655.20	60.66
J-269	2,515.00	A	4.00	Demand	Fixed	4.00	2,655.20	60.66
FH-272	2,514.00	A	0.00	Demand	Fixed	0.00	2,655.16	61.07

Scenario: 2006 Max Day
Steady State Analysis
Junction Report

Label	Elevation (ft)	Zone	Base Flow (gpm)	Type	Pattern	Demand (Calculated) (gpm)	Calculated Hydraulic Grade (ft)	Pressure (psi)
FH-268	2,514.00	A	0.00	Demand	Fixed	0.00	2,655.20	61.09
J-266	2,514.00	A	2.00	Demand	Fixed	2.00	2,655.20	61.09
J-264	2,514.00	A	4.00	Demand	Fixed	4.00	2,655.21	61.09
J-272	2,513.90	A	1.50	Demand	Fixed	1.50	2,655.16	61.12
J-260	2,512.40	A	4.00	Demand	Fixed	4.00	2,654.50	61.48
J-278	2,512.50	A	3.00	Demand	Fixed	3.00	2,654.67	61.60
J-276	2,512.30	A	7.00	Demand	Fixed	7.00	2,654.67	61.60
FH-276	2,512.30	A	0.00	Demand	Fixed	0.00	2,654.67	61.60
J-261	2,512.20	A	1.00	Demand	Fixed	1.00	2,654.60	61.61
FH-261	2,512.20	A	0.00	Demand	Fixed	0.00	2,654.60	61.61
J-262	2,513.00	A	2.00	Demand	Fixed	2.00	2,655.43	61.62
J-282	2,512.50	A	3.00	Demand	Fixed	3.00	2,655.08	61.69
FH-274	2,512.25	A	0.00	Demand	Fixed	0.00	2,654.89	61.72
J-274	2,512.25	A	5.00	Demand	Fixed	5.00	2,654.89	61.72
J-270	2,512.50	A	4.00	Demand	Fixed	4.00	2,655.21	61.74
FH-270	2,512.50	A	0.00	Demand	Fixed	0.00	2,655.21	61.74
J-275	2,512.10	A	3.50	Demand	Fixed	3.50	2,654.87	61.77
J-279	2,512.10	A	4.00	Demand	Fixed	4.00	2,655.08	61.86
FH-279	2,512.10	A	0.00	Demand	Fixed	0.00	2,655.08	61.86
J-280	2,512.00	A	4.00	Demand	Fixed	4.00	2,655.08	61.90
J-273	2,512.00	A	2.00	Demand	Fixed	2.00	2,655.08	61.90
FH-268	2,512.00	A	0.00	Demand	Fixed	0.00	2,655.20	61.96
J-268	2,512.00	A	3.50	Demand	Fixed	3.50	2,655.20	61.96
J-265	2,512.00	A	1.50	Demand	Fixed	1.50	2,655.20	61.96
J-271	2,511.90	A	2.50	Demand	Fixed	2.50	2,655.21	62.00
J-277	2,511.50	A	4.00	Demand	Fixed	4.00	2,654.87	62.03
FH-277	2,511.50	A	0.00	Demand	Fixed	0.00	2,654.87	62.03
Legacy Well 4	2,513.00	A	0.00	Demand	Fixed	0.00	2,656.43	62.06
J-281	2,511.50	A	1.00	Demand	Fixed	1.00	2,655.08	62.12
FH-281	2,511.50	A	0.00	Demand	Fixed	0.00	2,655.08	62.12

Scenario: 2006 Max Day
Steady State Analysis
Valve Report

Label	Elevation (ft)	Initial Pressure (psi)	Diameter (in)	Minor Loss Coefficient	Control Status	Discharge (gpm)	From HGL (ft)	To HGL (ft)	Headloss (ft)
PRV-2	2,514.00	69.68	6.0	3.00	Inactive	16.48	2,642.31	2,642.31	0.00
PRV-3	2,518.50	68.60	8.0	3.00	Inactive	70.58	2,642.31	2,642.30	0.01

City of Eagle Municipal Water System
Western Expansion Area

Well #4 and Well #5 Booster Pump

April 11, 2008

Scenario: 2006 Max Day

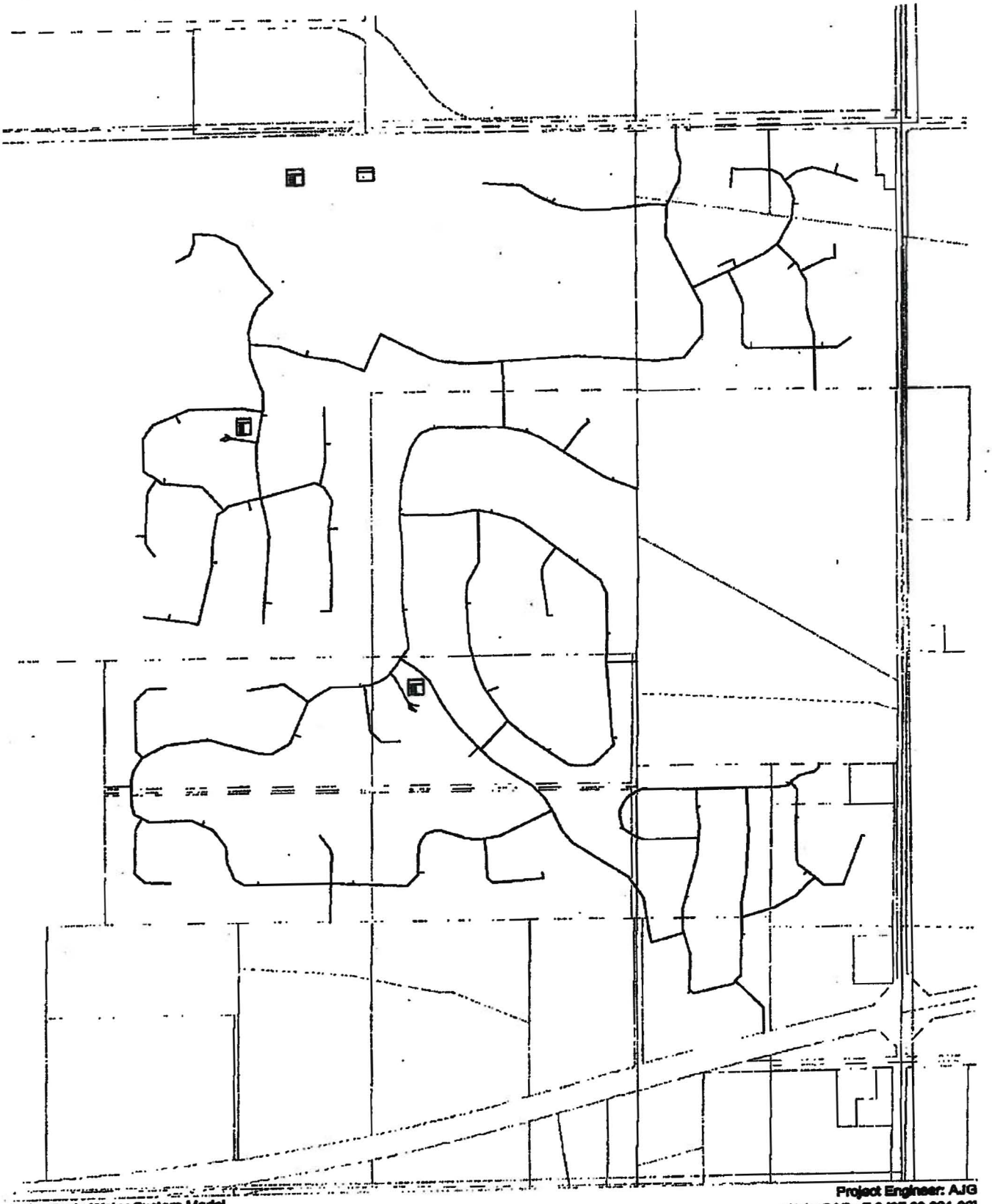

Project Engineer: AJG

Title: Eagle Water System Model

I:\...legacy & eagelfield\legacy & eaglefield.wcd

Holladay Engineering

WaterCAD v7.0 [07.00.081.00]

04/11/08 12:09:50 PM © Bentley Systems, Inc. Haestad Methods Solution Center Watertown, CT 06795 USA +1-203-755-1666

Scenario: 2006 Max Day

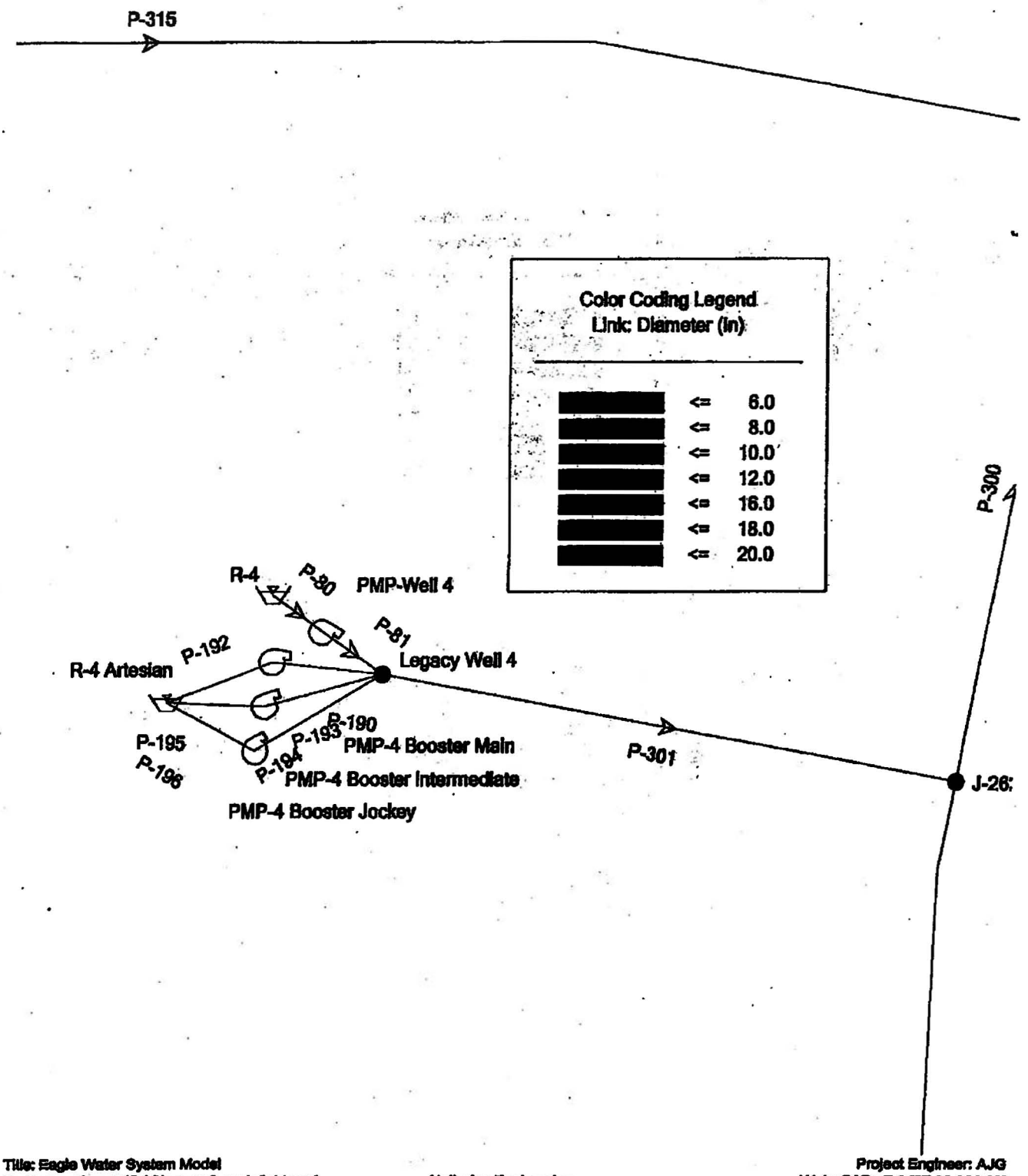

Scenario: 2006 Max Day

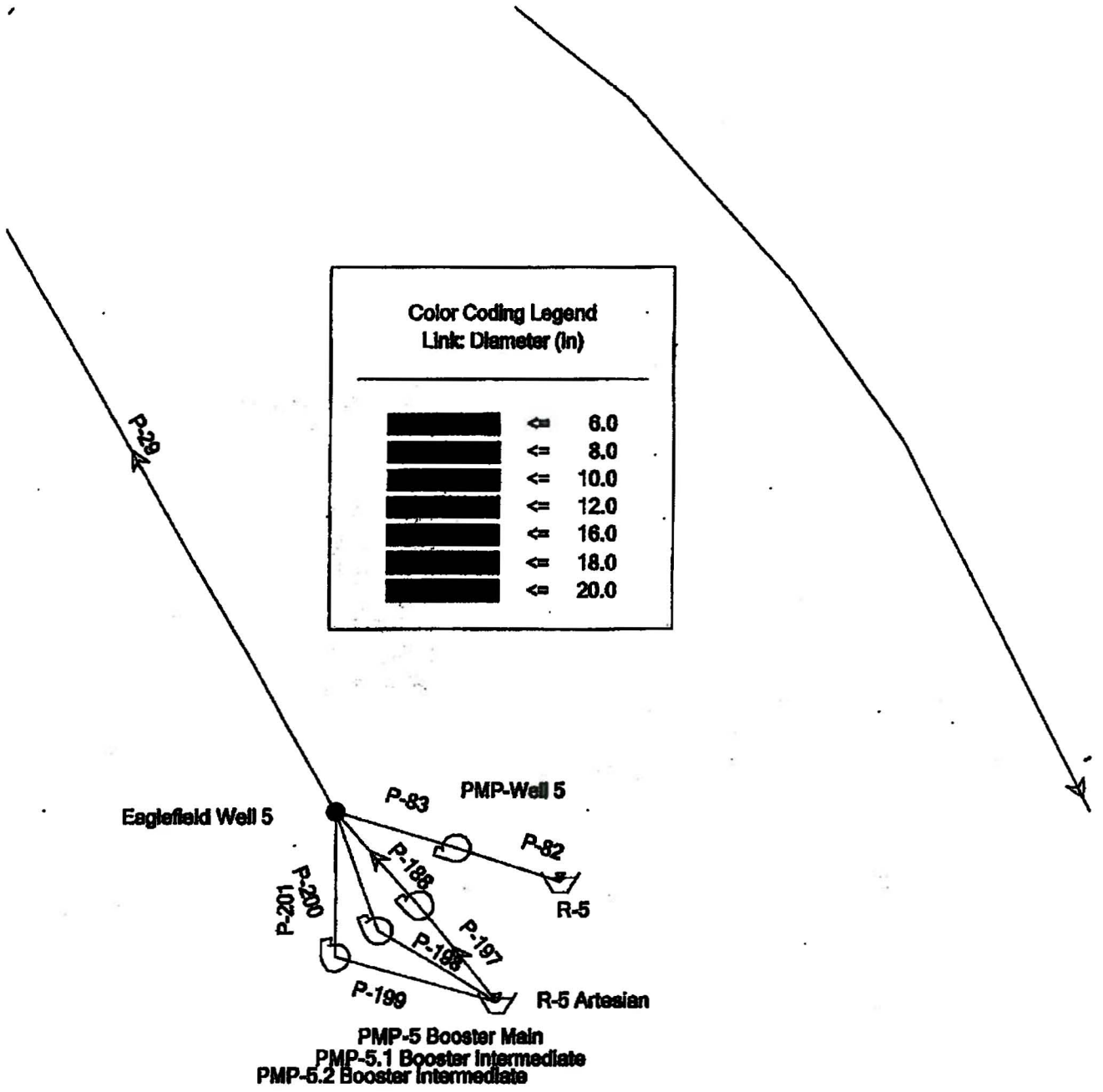

Scenario: 2006 Max Day
Steady State Analysis
Pump Report

Label	Elevation (ft)	Control Status	Discharge (gpm)	Initial Relative Speed Factor	Intake Pump Grade (ft)	Discharge Pump Grade (ft)	Pump Head (ft)	Calculated Water Power (Hp)	Discharge Pump Pressure (psi)	Intake Pump Pressure (psi)
PMP-4 Booster Intermediate	2,513.00	Off	0.00	1.00	2,513.00	2,664.87	0.00	0.00	65.62	0.00
PMP-4 Booster Jockey	2,513.00	Off	0.00	1.00	2,513.00	2,664.87	0.00	0.00	65.62	0.00
PMP-4 Booster Main	2,513.00	Off	0.00	1.00	2,513.00	2,664.87	0.00	0.00	65.62	0.00
PMP-5 Booster Main	2,516.00	On	169.42	1.00	2,515.98	2,651.14	135.17	5.44	58.47	-0.01
PMP-5.1 Booster Intermediate	2,516.00	Pump cann	0.00	1.00	2,516.00	2,651.12	0.00	0.00	58.46	0.00
PMP-5.2 Booster Intermediate	2,516.00	Pump cann	0.00	1.00	2,516.00	2,651.12	0.00	0.00	58.46	0.00
PMP-Well 4	2,475.00	On	1,882.74	1.00	2,494.90	2,664.79	169.89	80.76	82.11	8.61
PMP-Well 5	2,460.00	Off	0.00	1.00	2,498.00	2,651.12	0.00	0.00	74.04	7.79

Scenario: 2006 Max Day
Steady State Analysis
Junction Report

Label	Elevation (ft)	Zone	Base Flow (gpm)	Type	Pattern	Demand (Calculated) (gpm)	Calculated Hydraulic Grade (ft)	Pressure (psi)
FH-234	2,527.60	A	1,780.00	Demand	Fixed	1,780.00	2,573.95	20.05
J-234	2,527.60	A	4.00	Demand	Fixed	4.00	2,604.30	33.18
FH-232	2,531.40	A	0.00	Demand	Fixed	0.00	2,617.47	37.24
J-232	2,531.40	A	2.00	Demand	Fixed	2.00	2,617.47	37.24
J-231	2,531.00	A	2.00	Demand	Fixed	2.00	2,617.47	37.41
J-233	2,526.10	A	2.50	Demand	Fixed	2.50	2,617.47	38.66
J-235	2,526.10	A	1.00	Demand	Fixed	1.00	2,623.41	42.10
FH-235	2,526.10	A	0.00	Demand	Fixed	0.00	2,623.41	42.10
J-236	2,521.50	A	0.50	Demand	Fixed	0.50	2,633.82	48.60
FH-239	2,521.50	A	0.00	Demand	Fixed	0.00	2,634.71	48.98
J-239	2,521.50	A	3.50	Demand	Fixed	3.50	2,634.71	48.98
FH-237	2,520.50	A	0.00	Demand	Fixed	0.00	2,634.48	49.30
J-237	2,520.50	A	2.00	Demand	Fixed	2.00	2,634.48	49.30
J-238	2,518.50	A	3.00	Demand	Fixed	3.00	2,634.71	49.85
J-240	2,520.50	A	3.50	Demand	Fixed	3.50	2,636.71	50.15
J-242	2,520.00	A	2.50	Demand	Fixed	2.50	2,636.71	50.49
J-243	2,520.00	A	0.00	Demand	Fixed	0.00	2,636.71	50.49
FH-241	2,520.00	A	0.00	Demand	Fixed	0.00	2,636.71	50.49
J-241	2,520.00	A	1.50	Demand	Fixed	1.50	2,636.71	50.49
J-247	2,521.00	A	3.00	Demand	Fixed	3.00	2,639.50	51.27
FH-247	2,521.00	A	0.00	Demand	Fixed	0.00	2,639.50	51.27
FH-244	2,519.50	A	0.00	Demand	Fixed	0.00	2,638.38	51.43
J-244	2,519.50	A	7.00	Demand	Fixed	7.00	2,638.38	51.43
J-246	2,520.10	A	0.00	Demand	Fixed	0.00	2,639.50	51.66
J-245	2,520.00	A	3.50	Demand	Fixed	3.50	2,640.68	52.20
J-250	2,522.00	A	0.00	Demand	Fixed	0.00	2,649.89	55.33
FH-251	2,520.80	A	0.00	Demand	Fixed	0.00	2,649.89	55.85
J-251	2,520.80	A	2.50	Demand	Fixed	2.50	2,649.89	55.85
J-249	2,520.80	A	0.00	Demand	Fixed	0.00	2,649.89	55.85
J-248	2,519.10	A	0.00	Demand	Fixed	0.00	2,649.89	56.59
J-252	2,519.00	A	3.00	Demand	Fixed	3.00	2,649.89	56.63
J-126	2,520.00	L	0.00	Demand	Fixed	0.00	2,651.08	56.71
FH-126	2,520.00	L	0.00	Demand	Fixed	0.00	2,651.08	56.71
J-127	2,520.00	L	0.00	Demand	Fixed	0.00	2,651.09	56.71
J-128	2,520.00	L	0.00	Demand	Fixed	0.00	2,651.09	56.71
FH-128	2,520.00	L	0.00	Demand	Fixed	0.00	2,651.09	56.71
J-193	2,520.00	L	0.00	Demand	Fixed	0.00	2,651.09	56.71
J-112	2,520.00	L	0.00	Demand	Fixed	0.00	2,651.09	56.72
J-116	2,519.20	L	1.00	Demand	Fixed	1.00	2,651.08	57.08
J-122	2,519.00	L	0.00	Demand	Fixed	0.00	2,651.08	57.15
J-123	2,519.00	L	0.00	Demand	Fixed	0.00	2,651.08	57.15
J-124	2,519.00	L	0.00	Demand	Fixed	0.00	2,651.08	57.15
FH-122	2,519.00	L	0.00	Demand	Fixed	0.00	2,651.08	57.15
FH-125	2,519.00	L	0.00	Demand	Fixed	0.00	2,651.08	57.15
J-125	2,519.00	L	0.00	Demand	Fixed	0.00	2,651.08	57.15
J-192	2,519.00	L	0.00	Demand	Fixed	0.00	2,651.09	57.15
FH-113	2,519.00	L	0.00	Demand	Fixed	0.00	2,651.09	57.15
J-113	2,519.00	L	5.50	Demand	Fixed	5.50	2,651.09	57.15
J-115	2,518.60	L	3.00	Demand	Fixed	3.00	2,651.08	57.32
J-120	2,518.50	L	1.00	Demand	Fixed	1.00	2,651.08	57.36
FH-120	2,518.50	L	0.00	Demand	Fixed	0.00	2,651.08	57.36
J-121	2,518.50	L	4.00	Demand	Fixed	4.00	2,651.09	57.36

Scenario: 2006 Max Day
Steady State Analysis
Junction Report

Label	Elevation (ft)	Zone	Base Flow (gpm)	Type	Pattern	Demand (Calculated) (gpm)	Calculated Hydraulic Grade (ft)	Pressure (psi)
FH-121	2,518.50	L	0.00	Demand	Fixed	0.00	2,651.09	57.36
J-72	2,518.50	A	0.00	Demand	Fixed	0.00	2,651.10	57.37
FH-70	2,518.10	A	0.00	Demand	Fixed	0.00	2,651.10	57.54
J-70	2,518.10	A	2.00	Demand	Fixed	2.00	2,651.10	57.54
J-117	2,518.00	L	2.00	Demand	Fixed	2.00	2,651.08	57.58
J-119	2,518.00	L	6.00	Demand	Fixed	6.00	2,651.08	57.58
J-114	2,518.00	L	6.00	Demand	Fixed	6.00	2,651.08	57.58
FH-114	2,518.00	L	0.00	Demand	Fixed	0.00	2,651.08	57.58
J-111	2,518.00	L	12.00	Demand	Fixed	12.00	2,651.09	57.58
J-109	2,518.00	L	5.00	Demand	Fixed	5.00	2,651.09	57.58
J-61	2,518.00	A	1.00	Demand	Fixed	1.00	2,651.10	57.59
FH-64	2,518.00	A	0.00	Demand	Fixed	0.00	2,651.10	57.59
J-64	2,518.00	A	1.00	Demand	Fixed	1.00	2,651.10	57.59
J-65	2,517.60	A	2.00	Demand	Fixed	2.00	2,651.10	57.67
J-59	2,517.60	A	2.00	Demand	Fixed	2.00	2,651.10	57.76
FH-59	2,517.60	A	0.00	Demand	Fixed	0.00	2,651.10	57.76
FH-79	2,517.50	A	0.00	Demand	Fixed	0.00	2,651.10	57.80
J-79	2,517.50	A	3.50	Demand	Fixed	3.50	2,651.10	57.80
J-71	2,517.50	A	2.00	Demand	Fixed	2.00	2,651.10	57.80
J-60	2,517.50	A	1.00	Demand	Fixed	1.00	2,651.10	57.80
FH-60	2,517.50	A	0.00	Demand	Fixed	0.00	2,651.10	57.80
J-73	2,517.30	A	2.00	Demand	Fixed	2.00	2,651.10	57.89
FH-73	2,517.30	A	0.00	Demand	Fixed	0.00	2,651.10	57.89
J-118	2,517.00	L	7.00	Demand	Fixed	7.00	2,651.08	58.01
FH-118	2,517.00	L	0.00	Demand	Fixed	0.00	2,651.08	58.01
FH-110	2,517.00	L	0.00	Demand	Fixed	0.00	2,651.09	58.01
J-110	2,517.00	L	10.00	Demand	Fixed	10.00	2,651.09	58.01
J-108	2,517.00	L	0.00	Demand	Fixed	0.00	2,651.09	58.01
J-106	2,517.00	L	0.50	Demand	Fixed	0.50	2,651.09	58.01
J-69	2,517.00	A	2.50	Demand	Fixed	2.50	2,651.10	58.02
FH-69	2,517.00	A	0.00	Demand	Fixed	0.00	2,651.10	58.02
J-63	2,517.00	A	2.00	Demand	Fixed	2.00	2,651.10	58.02
FH-78	2,516.80	A	0.00	Demand	Fixed	0.00	2,651.10	58.19
J-78	2,516.80	A	2.50	Demand	Fixed	2.50	2,651.10	58.19
FH-62	2,516.80	A	0.00	Demand	Fixed	0.00	2,651.10	58.19
J-62	2,516.80	A	1.50	Demand	Fixed	1.50	2,651.10	58.19
J-66	2,516.60	A	2.00	Demand	Fixed	2.00	2,651.10	58.23
J-107	2,516.50	A	0.50	Demand	Fixed	0.50	2,651.10	58.24
J-68	2,516.50	A	2.00	Demand	Fixed	2.00	2,651.10	58.24
FH-158	2,516.50	A	0.00	Demand	Fixed	0.00	2,651.10	58.24
J-158	2,516.50	A	0.00	Demand	Fixed	0.00	2,651.10	58.24
J-66	2,516.30	A	3.00	Demand	Fixed	3.00	2,651.10	58.32
J-283	2,516.30	A	0.00	Demand	Fixed	0.00	2,651.10	58.32
J-80	2,516.30	A	3.00	Demand	Fixed	3.00	2,651.10	58.32
FH-80	2,516.30	A	0.00	Demand	Fixed	0.00	2,651.10	58.32
J-105	2,516.00	L	5.00	Demand	Fixed	5.00	2,651.09	58.45
FH-105	2,516.00	L	0.00	Demand	Fixed	0.00	2,651.09	58.45
FH-67	2,516.00	A	0.00	Demand	Fixed	0.00	2,651.10	58.46
J-67	2,516.00	A	1.00	Demand	Fixed	1.00	2,651.10	58.46
J-76	2,516.00	A	2.00	Demand	Fixed	2.00	2,651.10	58.46
Eaglefield Well 5	2,516.00	A	0.00	Demand	Fixed	0.00	2,651.12	58.46
FH-74	2,515.80	A	0.00	Demand	Fixed	0.00	2,651.10	58.54

Scenario: 2006 Max Day
Steady State Analysis
Junction Report

Label	Elevation (ft)	Zone	Base Flow (gpm)	Type	Pattern	Demand (Calculated) (gpm)	Calculated Hydraulic Grade (ft)	Pressure (psi)
J-74	2,515.80	A	1.50	Demand	Fixed	1.50	2,651.10	58.54
FH-104	2,515.50	L	0.00	Demand	Fixed	0.00	2,651.09	58.66
J-103	2,515.50	L	4.00	Demand	Fixed	4.00	2,651.09	58.66
J-104	2,515.50	L	2.00	Demand	Fixed	2.00	2,651.09	58.66
J-77	2,515.50	A	4.50	Demand	Fixed	4.50	2,651.10	58.67
FH-77	2,515.50	A	0.00	Demand	Fixed	0.00	2,651.10	58.67
J-57	2,515.50	A	2.00	Demand	Fixed	2.00	2,651.10	58.67
FH-57	2,515.50	A	0.00	Demand	Fixed	0.00	2,651.10	58.67
J-56	2,515.50	A	2.00	Demand	Fixed	2.00	2,651.10	58.67
J-253	2,515.00	A	0.00	Demand	Fixed	0.00	2,651.10	58.88
J-81	2,515.00	A	1.50	Demand	Fixed	1.50	2,651.10	58.88
J-82	2,514.35	A	0.00	Demand	Fixed	0.00	2,651.11	59.17
J-101	2,514.30	L	1.50	Demand	Fixed	1.50	2,651.09	59.18
FH-101	2,514.30	L	0.00	Demand	Fixed	0.00	2,651.09	59.18
J-85	2,514.30	L	4.50	Demand	Fixed	4.50	2,651.10	59.19
FH-102	2,514.00	L	0.00	Demand	Fixed	0.00	2,651.09	59.31
J-102	2,514.00	L	5.00	Demand	Fixed	5.00	2,651.09	59.31
J-86	2,513.50	L	1.00	Demand	Fixed	1.00	2,651.10	59.53
FH-86	2,513.50	L	0.00	Demand	Fixed	0.00	2,651.10	59.53
J-84	2,513.50	L	1.00	Demand	Fixed	1.00	2,651.10	59.53
J-98	2,513.00	L	0.00	Demand	Fixed	0.00	2,651.09	59.75
J-99	2,513.00	L	0.00	Demand	Fixed	0.00	2,651.09	59.75
J-87	2,513.00	L	0.00	Demand	Fixed	0.00	2,651.10	59.75
J-100	2,512.00	L	0.00	Demand	Fixed	0.00	2,651.09	60.18
J-148	2,512.00	L	0.00	Demand	Fixed	0.00	2,651.10	60.18
FH-148	2,512.00	L	0.00	Demand	Fixed	0.00	2,651.10	60.18
J-88	2,512.00	L	0.00	Demand	Fixed	0.00	2,651.10	60.18
J-254	2,516.40	A	1.50	Demand	Fixed	1.50	2,658.63	60.67
J-97	2,510.00	L	0.00	Demand	Fixed	0.00	2,651.09	61.04
FH-97	2,510.00	L	0.00	Demand	Fixed	0.00	2,651.09	61.04
J-91	2,510.00	L	0.00	Demand	Fixed	0.00	2,651.10	61.05
FH-89	2,510.00	L	0.00	Demand	Fixed	0.00	2,651.10	61.05
J-89	2,510.00	L	0.00	Demand	Fixed	0.00	2,651.10	61.05
FH-96	2,508.00	L	0.00	Demand	Fixed	0.00	2,651.10	61.91
J-96	2,508.00	L	0.00	Demand	Fixed	0.00	2,651.10	61.91
J-90	2,508.00	L	0.00	Demand	Fixed	0.00	2,651.10	61.91
J-255	2,513.50	A	3.00	Demand	Fixed	3.00	2,658.58	62.77
FH-255	2,513.50	A	0.00	Demand	Fixed	0.00	2,658.58	62.77
J-95	2,508.00	L	0.00	Demand	Fixed	0.00	2,651.10	62.78
J-94	2,508.00	L	0.00	Demand	Fixed	0.00	2,651.10	62.78
J-145	2,508.00	L	0.00	Demand	Fixed	0.00	2,651.10	62.78
FH-145	2,508.00	L	0.00	Demand	Fixed	0.00	2,651.10	62.78
J-93	2,508.00	L	0.00	Demand	Fixed	0.00	2,651.10	62.78
J-92	2,508.00	L	0.00	Demand	Fixed	0.00	2,651.10	62.78
J-258	2,514.00	A	0.00	Demand	Fixed	0.00	2,660.52	63.39
J-257	2,514.00	A	3.00	Demand	Fixed	3.00	2,660.52	63.39
J-256	2,514.00	A	2.00	Demand	Fixed	2.00	2,660.52	63.39
J-267	2,518.70	A	2.00	Demand	Fixed	2.00	2,663.49	63.51
J-259	2,513.50	A	0.00	Demand	Fixed	0.00	2,660.52	63.81
FH-269	2,515.00	A	0.00	Demand	Fixed	0.00	2,663.49	64.24
J-269	2,515.00	A	4.00	Demand	Fixed	4.00	2,663.49	64.24
FH-272	2,514.00	A	0.00	Demand	Fixed	0.00	2,663.46	64.66

Scenario: 2006 Max Day
Steady State Analysis
Valve Report

Label	Elevation (ft)	Initial Pressure (psi)	Diameter (in)	Minor Loss Coefficient	Control Status	Discharge (gpm)	From HGL (ft)	To HGL (ft)	Headloss (ft)
PRV-2	2,514.00	69.68	6.0	3.00	Inactive	18.30	2,651.11	2,651.10	0.00
PRV-3	2,516.50	68.60	8.0	3.00	Inactive	68.76	2,651.10	2,651.09	0.01

Scenario: 2006 Max Day
Steady State Analysis
Junction Report

Label	Elevation (ft)	Zone	Base Flow (gpm)	Type	Pattern	Demand (Calculated) (gpm)	Calculated Hydraulic Grade (ft)	Pressure (psi)
FH-266	2,514.00	A	0.00	Demand	Fixed	0.00	2,663.49	64.68
J-266	2,514.00	A	2.00	Demand	Fixed	2.00	2,663.49	64.68
J-264	2,514.00	A	4.00	Demand	Fixed	4.00	2,663.49	64.68
J-272	2,513.90	A	1.50	Demand	Fixed	1.50	2,663.45	64.70
J-260	2,512.40	A	4.00	Demand	Fixed	4.00	2,662.81	65.07
J-278	2,512.50	A	3.00	Demand	Fixed	3.00	2,663.17	65.19
J-276	2,512.30	A	7.00	Demand	Fixed	7.00	2,662.98	65.19
FH-276	2,512.30	A	0.00	Demand	Fixed	0.00	2,662.98	65.19
J-261	2,512.20	A	1.00	Demand	Fixed	1.00	2,662.90	65.20
FH-261	2,512.20	A	0.00	Demand	Fixed	0.00	2,662.90	65.20
J-262	2,513.00	A	2.00	Demand	Fixed	2.00	2,663.71	65.20
J-282	2,512.50	A	3.00	Demand	Fixed	3.00	2,663.36	65.27
FH-274	2,512.25	A	0.00	Demand	Fixed	0.00	2,663.19	65.30
J-274	2,512.25	A	5.00	Demand	Fixed	5.00	2,663.19	65.30
J-270	2,512.50	A	4.00	Demand	Fixed	4.00	2,663.49	65.33
FH-270	2,512.50	A	0.00	Demand	Fixed	0.00	2,663.49	65.33
J-275	2,512.10	A	3.50	Demand	Fixed	3.50	2,663.17	65.36
J-279	2,512.10	A	4.00	Demand	Fixed	4.00	2,663.36	65.44
FH-279	2,512.10	A	0.00	Demand	Fixed	0.00	2,663.36	65.44
J-280	2,512.00	A	4.00	Demand	Fixed	4.00	2,663.36	65.49
J-273	2,512.00	A	2.00	Demand	Fixed	2.00	2,663.37	65.49
FH-268	2,512.00	A	0.00	Demand	Fixed	0.00	2,663.49	65.54
J-268	2,512.00	A	3.50	Demand	Fixed	3.50	2,663.49	65.54
J-265	2,512.00	A	1.50	Demand	Fixed	1.50	2,663.49	65.54
J-271	2,511.90	A	2.50	Demand	Fixed	2.50	2,663.49	65.59
J-277	2,511.50	A	4.00	Demand	Fixed	4.00	2,663.17	65.62
FH-277	2,511.50	A	0.00	Demand	Fixed	0.00	2,663.17	65.62
Legacy Well 4	2,513.00	A	0.00	Demand	Fixed	0.00	2,664.67	65.62
J-281	2,511.50	A	1.00	Demand	Fixed	1.00	2,663.36	65.70
FH-281	2,511.50	A	0.00	Demand	Fixed	0.00	2,663.36	65.70

Western System

Scenario: 2006 Max Day

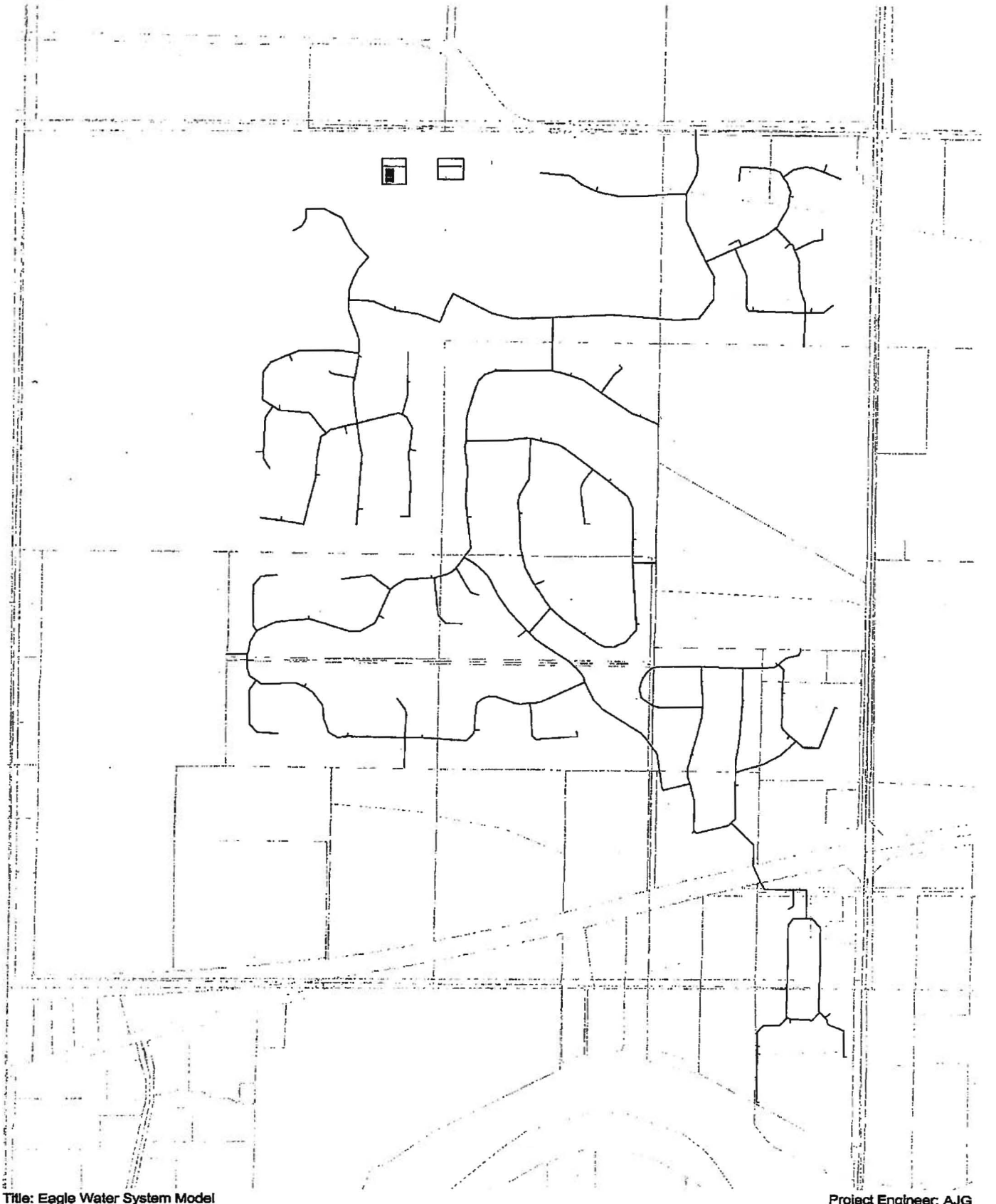

Scenario: 2006 Max Day
Fire Flow Analysis
Pump Report

Label	Elevation (ft)	Control Status	Discharge (gpm)	Initial Relative Speed Factor	Intake Pump Grade (ft)	Discharge Pump Grade (ft)	Pump Head (ft)	Calculated Water Power (Hp)	Discharge Pump Pressure (psi)	Intake Pump Pressure (psi)
PMP-Well 4	2,475.00	On	116.93	1.00	2,495.00	2,700.00	205.00	6.05	97.35	8.65
PMP-Well 5	2,480.00	On	163.15	1.00	2,498.00	2,700.00	202.00	8.32	95.18	7.79
PMP-Well 6	2,480.00	Off	0.00	1.00	2,500.00	2,699.96	0.00	0.00	95.17	8.65

Scenario: 2006 Max Day
Fire Flow Analysis
Fire Flow Report

Label	Available Fire Flow (gpm)	Total Flow Available (gpm)	Pressure (psi)	Residual Pressure (psi)	Calculated Residual Pressure (psi)	Minimum Zone Pressure (psi)	Calculated Minimum Zone Pressure (psi)	Minimum Zone Junction	Zone
FH-234	2,288.68	2,288.68	74.57	20.00	20.00	20.00	41.25	J-234	A
FH-232	2,395.29	2,395.29	72.93	20.00	20.00	20.00	36.98	J-232	A
FH-269	2,455.97	2,455.97	80.03	20.00	20.00	20.00	39.00	J-269	A
FH-213	2,735.02	2,735.02	77.86	20.00	20.00	20.00	22.52	J-213	L
FH-281	2,765.47	2,765.47	81.55	20.00	20.00	20.00	37.40	J-282	A
J-231	2,798.97	2,800.97	73.10	20.00	20.00	20.00	25.07	FH-232	A
J-213	2,801.74	2,801.74	77.86	20.00	20.00	20.00	20.00	FH-213	L
FH-128	2,808.45	2,808.45	77.86	20.00	20.01	20.00	36.49	J-128	L
FH-239	2,840.14	2,840.14	77.21	20.00	20.00	20.00	46.72	J-239	A
FH-105	2,874.36	2,874.36	79.59	20.00	20.01	20.00	39.83	J-105	L
J-232	2,956.61	2,958.61	72.93	20.00	20.00	20.00	20.00	FH-232	A
FH-268	2,968.83	2,968.83	81.33	20.00	20.01	20.00	43.40	FH-269	A
J-234	2,993.58	2,997.58	74.57	20.00	20.00	20.00	20.00	FH-234	A
J-269	3,019.48	3,023.48	80.03	20.00	20.00	20.00	20.00	FH-269	A
FH-79	3,030.16	3,030.16	78.95	20.00	20.01	20.00	41.56	J-79	A
FH-235	3,047.94	3,047.94	75.22	20.00	20.01	20.00	38.85	FH-232	A
FH-270	3,059.37	3,059.37	81.11	20.00	20.01	20.00	42.86	J-270	A
J-91	3,074.01	3,074.01	82.19	20.00	20.00	20.00	46.72	J-90	L
J-94	3,076.46	3,076.46	83.92	20.00	20.00	20.00	46.23	J-95	L
FH-251	3,096.28	3,096.28	77.52	20.00	20.01	20.00	41.59	J-251	A
J-282	3,101.31	3,104.31	81.11	20.00	20.00	20.00	27.56	FH-281	A
FH-266	3,119.34	3,119.34	80.47	20.00	20.01	20.00	40.96	J-267	A
FH-206	3,147.29	3,147.29	77.86	20.00	20.00	20.00	22.81	J-206	L
FH-145	3,151.54	3,151.54	83.92	20.00	20.00	20.00	44.92	J-145	L
J-252	3,153.39	3,156.39	78.30	20.00	20.00	20.00	40.35	FH-251	A
J-259	3,156.36	3,156.36	80.68	20.00	20.00	20.00	30.03	J-258	A
FH-96	3,186.91	3,186.91	83.06	20.00	20.00	20.00	42.59	J-96	L
FH-60	3,201.23	3,201.23	78.95	20.00	20.01	20.00	40.42	J-61	A
FH-277	3,204.43	3,204.43	81.55	20.00	20.01	20.00	47.74	J-278	A
FH-97	3,232.12	3,232.12	82.19	20.00	20.00	20.00	42.25	J-97	L
J-206	3,232.93	3,234.93	77.86	20.00	20.00	20.00	20.00	FH-206	L
FH-211	3,236.70	3,236.70	77.86	20.00	20.00	20.00	23.20	J-211	L
FH-247	3,252.09	3,252.09	77.43	20.00	20.01	20.00	55.20	J-232	A
FH-101	3,272.78	3,272.78	80.33	20.00	20.00	20.00	43.56	J-101	L
FH-237	3,298.16	3,298.16	77.65	20.00	20.01	20.00	48.91	FH-232	A
FH-59	3,307.07	3,307.07	78.91	20.00	20.00	20.00	43.53	J-59	A
FH-241	3,310.42	3,310.42	77.86	20.00	20.01	20.00	44.88	J-242	A
J-281	3,316.60	3,317.60	81.55	20.00	20.46	20.00	20.03	J-282	A
J-211	3,337.69	3,337.69	77.86	20.00	20.00	20.00	20.00	FH-211	L
FH-148	3,351.95	3,351.95	81.33	20.00	20.00	20.00	48.11	J-148	L
FH-89	3,358.66	3,358.66	82.19	20.00	20.00	20.00	42.15	J-89	L
J-128	3,365.81	3,365.81	77.86	20.00	20.00	20.00	20.00	FH-128	L
FH-102	3,369.60	3,369.60	80.46	20.00	20.00	20.00	47.07	J-102	L
FH-126	3,406.15	3,406.15	77.86	20.00	20.00	20.00	46.57	J-126	L
FH-279	3,458.55	3,458.55	81.29	20.00	20.00	20.00	46.64	J-282	A
J-267	3,466.12	3,468.12	79.30	20.00	20.00	20.00	33.92	FH-266	A
FH-244	3,469.09	3,469.09	78.08	20.00	20.00	20.00	47.54	J-244	A
J-258	3,481.55	3,481.55	80.47	20.00	20.00	20.00	20.22	J-259	A
J-99	3,493.41	3,493.41	80.89	20.00	20.00	20.00	38.03	J-98	L
J-233	3,501.69	3,504.19	74.36	20.00	21.44	20.00	20.01	FH-232	A

Scenario: 2006 Max Day
Fire Flow Analysis
Fire Flow Report

Label	Available Fire Flow (gpm)	Total Flow Available (gpm)	Pressure (psi)	Residual Pressure (psi)	Calculated Residual Pressure (psi)	Minimum Zone Pressure (psi)	Calculated Minimum Zone Pressure (psi)	Minimum Zone Junction	Zone
FH-125	3,518.76	3,518.76	78.29	20.00	20.00	20.00	45.16	J-125	L
FH-204	3,558.20	3,558.20	77.86	20.00	20.03	20.00	31.77	J-206	L
FH-118	3,572.96	3,572.96	79.16	20.00	20.00	20.00	45.04	J-118	L
FH-122	3,575.89	3,575.89	78.29	20.00	20.00	20.00	46.56	J-122	L
J-105	3,576.78	3,581.78	79.59	20.00	20.00	20.00	20.00	FH-105	L
J-280	3,619.95	3,623.95	81.33	20.00	20.24	20.00	20.03	J-282	A
FH-70	3,651.85	3,651.85	78.69	20.00	20.00	20.00	48.00	J-70	A
J-61	3,657.40	3,658.40	78.73	20.00	20.00	20.00	29.96	FH-60	A
J-100	3,658.92	3,658.92	81.32	20.00	20.00	20.00	34.18	J-99	L
J-88	3,679.46	3,679.46	81.33	20.00	20.01	20.00	45.19	J-87	L
J-271	3,684.33	3,686.83	81.37	20.00	20.00	20.00	27.23	FH-270	A
FH-114	3,715.73	3,715.73	78.72	20.00	20.00	20.00	47.38	J-114	L
J-85	3,733.86	3,738.36	80.34	20.00	20.00	20.00	52.35	J-84	L
FH-77	3,736.79	3,736.79	79.81	20.00	20.00	20.00	64.08	J-77	A
FH-73	3,742.08	3,742.08	79.04	20.00	20.00	20.00	49.70	J-73	A
J-93	3,748.08	3,748.08	83.92	20.00	20.00	20.00	30.27	J-92	L
FH-120	3,768.68	3,768.68	78.51	20.00	20.00	20.00	48.16	J-120	L
FH-69	3,781.10	3,781.10	79.17	20.00	20.00	20.00	50.32	J-69	A
FH-104	3,798.51	3,798.51	79.81	20.00	20.00	20.00	48.39	FH-105	L
J-243	3,839.88	3,839.88	77.86	20.00	20.00	20.00	37.55	J-240	A
FH-86	3,859.07	3,859.07	80.68	20.00	20.00	20.00	49.86	J-86	L
J-235	3,874.63	3,875.63	75.22	20.00	22.29	20.00	20.00	FH-232	A
J-79	3,878.85	3,882.35	78.95	20.00	20.00	20.00	20.00	FH-79	A
J-268	3,882.15	3,885.65	81.33	20.00	21.31	20.00	20.01	FH-269	A
J-242	3,891.11	3,893.61	77.86	20.00	20.00	20.00	33.50	J-241	A
FH-208	3,904.89	3,904.89	77.86	20.00	20.02	20.00	26.65	J-208	L
J-270	3,944.67	3,948.67	81.11	20.00	20.00	20.00	20.00	FH-270	A
J-266	3,952.75	3,954.75	80.47	20.00	21.18	20.00	20.01	J-267	A
FH-276	3,957.01	3,957.01	81.20	20.00	20.00	20.00	62.45	J-276	A
FH-113	3,970.03	3,970.03	78.29	20.00	20.00	20.00	51.58	J-113	L
FH-272	3,981.38	3,981.38	80.47	20.00	20.00	20.00	63.73	J-272	A
J-251	3,995.76	3,998.26	77.52	20.00	20.00	20.00	20.00	FH-251	A
J-239	4,001.16	4,004.66	77.21	20.00	20.00	20.00	20.00	FH-239	A
J-278	4,017.13	4,020.13	81.11	20.00	20.00	20.00	30.95	FH-277	A
J-204	4,021.21	4,023.21	77.86	20.00	20.02	20.00	20.02	J-206	L
FH-274	4,032.91	4,032.91	81.22	20.00	20.00	20.00	57.39	J-274	A
J-60	4,034.36	4,035.36	78.95	20.00	20.23	20.00	20.01	J-61	A
FH-121	4,044.14	4,044.14	78.51	20.00	20.00	20.00	53.13	J-121	L
J-96	4,045.80	4,045.80	83.06	20.00	20.00	20.00	20.00	FH-96	L
J-127	4,081.29	4,081.29	77.86	20.00	20.00	20.00	20.00	J-128	L
J-95	4,085.59	4,085.59	83.92	20.00	20.00	20.00	20.00	J-94	L
J-90	4,100.36	4,100.36	83.06	20.00	20.87	20.00	20.01	J-91	L
FH-78	4,100.37	4,100.37	79.34	20.00	20.00	20.00	55.19	J-78	A
J-97	4,102.48	4,102.48	82.19	20.00	20.00	20.00	20.00	FH-97	L
J-145	4,108.33	4,108.33	83.92	20.00	20.00	20.00	20.00	FH-145	L
J-123	4,113.54	4,113.54	78.29	20.00	20.00	20.00	36.83	J-124	L
J-92	4,117.12	4,117.12	83.92	20.00	20.00	20.00	20.00	J-93	L
FH-74	4,134.95	4,134.95	79.68	20.00	20.00	20.00	55.39	J-74	A
J-208	4,169.63	4,169.63	77.86	20.00	20.01	20.00	20.01	FH-208	L
J-210	4,173.18	4,173.18	77.86	20.00	20.01	20.00	20.01	J-211	L

Scenario: 2006 Max Day
Fire Flow Analysis
Fire Flow Report

Label	Available Fire Flow (gpm)	Total Flow Available (gpm)	Pressure (psi)	Residual Pressure (psi)	Calculated Residual Pressure (psi)	Minimum Zone Pressure (psi)	Calculated Minimum Zone Pressure (psi)	Minimum Zone Junction	Zone
FH-201	4,183.58	4,183.58	77.86	20.00	20.01	20.00	25.56	J-201	L
J-203	4,187.61	4,190.61	77.86	20.00	20.00	20.00	20.00	J-206	L
FH-158	4,204.55	4,204.55	79.38	20.00	20.00	20.00	70.84	FH-232	A
J-98	4,220.80	4,220.80	80.89	20.00	20.00	20.00	20.00	J-99	L
FH-215	4,238.84	4,238.84	77.86	20.00	20.02	20.00	23.67	J-215	L
J-89	4,249.63	4,249.63	82.19	20.00	20.01	20.00	20.01	FH-89	L
J-101	4,273.80	4,275.30	80.33	20.00	20.00	20.00	20.00	FH-101	L
FH-67	4,317.87	4,317.87	79.60	20.00	20.00	20.00	59.39	J-67	A
J-59	4,359.51	4,361.51	78.91	20.00	20.00	20.00	20.00	FH-59	A
J-72	4,371.88	4,371.88	78.52	20.00	20.00	20.00	36.10	J-71	A
J-215	4,390.17	4,390.17	77.86	20.00	20.02	20.00	20.02	FH-215	L
J-201	4,417.06	4,423.06	77.86	20.00	20.00	20.00	20.00	FH-201	L
FH-110	4,427.19	4,427.19	79.16	20.00	20.00	20.00	58.77	J-206	L
J-277	4,449.98	4,453.98	81.55	20.00	20.44	20.00	20.01	J-278	A
J-241	4,496.44	4,497.94	77.86	20.00	20.00	20.00	20.00	J-242	A
FH-57	4,605.77	4,605.77	79.82	20.00	20.00	20.00	61.29	J-61	A
J-148	4,640.31	4,640.31	81.33	20.00	20.00	20.00	20.00	FH-148	L
J-102	4,640.49	4,645.49	80.46	20.00	20.00	20.00	20.00	FH-102	L
J-240	4,682.19	4,685.69	77.52	20.00	20.00	20.00	20.35	J-242	A
J-279	4,720.84	4,724.84	81.29	20.00	20.19	20.00	20.01	J-282	A
J-126	4,739.07	4,739.07	77.86	20.00	20.00	20.00	20.00	FH-126	L
J-125	4,766.33	4,766.33	78.29	20.00	20.00	20.00	20.00	FH-125	L
J-193	4,766.59	4,766.59	77.86	20.00	20.01	20.00	20.01	J-127	L
J-118	4,803.21	4,810.21	79.16	20.00	20.00	20.00	20.00	FH-118	L
J-265	4,836.63	4,838.13	81.33	20.00	22.03	20.00	20.00	J-267	A
J-238	4,843.13	4,846.13	78.08	20.00	20.87	20.00	20.01	J-239	A
J-87	4,876.92	4,876.92	80.90	20.00	20.00	20.00	20.43	J-88	L
FH-255	4,912.62	4,912.62	80.68	20.00	20.00	20.00	70.89	J-232	A
J-244	4,924.51	4,931.51	78.08	20.00	20.00	20.00	20.00	FH-244	A
J-237	4,929.39	4,931.39	77.65	20.00	20.01	20.00	20.01	FH-237	A
J-236	4,929.63	4,930.13	77.21	20.00	24.28	20.00	20.00	J-232	A
J-124	4,938.55	4,938.55	78.29	20.00	20.00	20.00	20.00	J-123	L
J-122	4,956.95	4,956.95	78.29	20.00	20.00	20.00	20.00	FH-122	L
J-106	5,000.00	5,000.50	79.16	20.00	58.66	20.00	57.36	J-126	L
J-107	5,000.00	5,000.50	79.38	20.00	74.97	20.00	70.09	J-232	A
J-112	5,000.00	5,000.00	77.86	20.00	52.45	20.00	52.45	FH-206	L
J-109	5,000.00	5,005.00	78.73	20.00	55.41	20.00	54.54	FH-126	L
J-108	5,000.00	5,000.00	79.16	20.00	56.30	20.00	55.00	FH-126	L
J-120	5,000.00	5,001.00	78.51	20.00	27.10	20.00	27.10	FH-120	L
J-121	5,000.00	5,004.00	78.51	20.00	40.74	20.00	40.74	FH-121	L
J-113	5,000.00	5,005.50	78.29	20.00	37.17	20.00	37.17	FH-113	L
J-119	5,000.00	5,006.00	78.72	20.00	30.63	20.00	32.38	J-118	L
J-260	5,000.00	5,004.00	81.16	20.00	78.04	20.00	72.13	J-232	A
J-255	5,000.00	5,003.00	80.68	20.00	74.35	20.00	70.83	FH-232	A
J-262	5,000.00	5,002.00	80.90	20.00	79.05	20.00	72.46	J-232	A
J-264	5,000.00	5,004.00	80.47	20.00	58.07	20.00	56.90	J-267	A
J-256	5,000.00	5,002.00	80.47	20.00	75.17	20.00	71.41	FH-232	A
J-110	5,000.00	5,010.00	79.16	20.00	55.12	20.00	53.82	FH-206	L
J-111	5,000.00	5,012.00	78.73	20.00	54.16	20.00	53.29	FH-206	L
J-257	5,000.00	5,003.00	80.47	20.00	34.27	20.00	34.27	J-258	A

Scenario: 2006 Max Day
Fire Flow Analysis
Fire Flow Report

Label	Available Fire Flow (gpm)	Total Flow Available (gpm)	Pressure (psi)	Residual Pressure (psi)	Calculated Residual Pressure (psi)	Minimum Zone Pressure (psi)	Calculated Minimum Zone Pressure (psi)	Minimum Zone Junction	Zone
J-68	5,000.00	5,002.00	79.38	20.00	34.94	20.00	34.50	FH-79	A
J-117	5,000.00	5,002.00	78.72	20.00	28.97	20.00	30.62	J-120	L
J-86	5,000.00	5,001.00	80.68	20.00	30.00	20.00	30.00	FH-86	L
J-103	5,000.00	5,004.00	79.81	20.00	34.03	20.00	33.81	FH-105	L
J-71	5,000.00	5,002.00	78.95	20.00	24.07	20.00	23.64	J-72	A
J-78	5,000.00	5,002.50	79.34	20.00	44.55	20.00	44.55	FH-78	A
J-104	5,000.00	5,002.00	79.81	20.00	27.77	20.00	27.55	FH-105	L
J-81	5,000.00	5,001.50	80.03	20.00	76.89	20.00	70.10	FH-232	A
J-82	5,000.00	5,000.00	80.32	20.00	77.96	20.00	70.86	J-232	A
J-84	5,000.00	5,001.00	80.68	20.00	31.02	20.00	30.67	J-85	L
J-80	5,000.00	5,003.00	79.47	20.00	76.03	20.00	69.83	FH-232	A
J-116	5,000.00	5,001.00	78.20	20.00	21.83	20.00	23.16	J-122	L
J-74	5,000.00	5,001.50	79.68	20.00	45.23	20.00	45.23	FH-74	A
J-114	5,000.00	5,006.00	78.72	20.00	24.22	20.00	24.22	FH-114	L
J-115	5,000.00	5,003.00	78.46	20.00	29.01	20.00	29.99	J-116	L
J-76	5,000.00	5,002.00	79.60	20.00	62.78	20.00	63.67	J-74	A
J-69	5,000.00	5,002.50	79.17	20.00	30.91	20.00	30.91	FH-69	A
J-70	5,000.00	5,002.00	78.69	20.00	23.94	20.00	23.94	FH-70	A
J-77	5,000.00	5,004.50	79.81	20.00	52.96	20.00	52.96	FH-77	A
J-73	5,000.00	5,002.00	79.04	20.00	29.01	20.00	29.01	FH-73	A
J-198	5,000.00	5,000.00	77.86	20.00	44.74	20.00	44.74	FH-206	L
FH-80	5,000.00	5,000.00	79.47	20.00	22.32	20.00	69.83	J-232	A
FH-198	5,000.00	5,000.00	77.86	20.00	37.58	20.00	44.74	FH-206	L
J-197	5,000.00	5,000.00	77.86	20.00	50.48	20.00	50.48	FH-206	L
J-276	5,000.00	5,007.00	81.20	20.00	52.37	20.00	52.37	FH-276	A
J-275	5,000.00	5,003.50	81.29	20.00	45.82	20.00	45.65	J-278	A
J-272	5,000.00	5,001.50	80.51	20.00	55.04	20.00	54.99	FH-272	A
J-283	5,000.00	5,000.00	79.47	20.00	74.71	20.00	68.21	J-232	A
J-56	5,000.00	5,002.00	79.82	20.00	75.19	20.00	68.40	J-232	A
FH-62	5,000.00	5,000.00	79.34	20.00	25.16	20.00	68.78	J-232	A
J-195	5,000.00	5,000.00	77.86	20.00	50.87	20.00	50.87	FH-206	L
FH-261	5,000.00	5,000.00	81.25	20.00	22.87	20.00	72.16	J-232	A
Orchards Well 6	5,000.00	5,000.00	77.86	20.00	49.08	20.00	50.87	FH-206	L
J-158	5,000.00	5,000.00	79.38	20.00	75.00	20.00	70.09	J-232	A
J-200	5,000.00	5,005.00	77.86	20.00	26.16	20.00	26.16	FH-206	L
J-192	5,000.00	5,000.00	78.29	20.00	34.05	20.00	35.24	J-193	L
J-194	5,000.00	5,000.00	77.86	20.00	51.91	20.00	51.91	FH-206	L
FH-64	5,000.00	5,000.00	78.73	20.00	25.56	20.00	69.33	J-232	A
J-273	5,000.00	5,002.00	81.33	20.00	51.31	20.00	51.09	J-282	A
J-253	5,000.00	5,000.00	80.03	20.00	75.14	20.00	68.04	FH-232	A
J-248	5,000.00	5,000.00	78.26	20.00	69.93	20.00	64.60	J-232	A
J-249	5,000.00	5,000.00	77.52	20.00	68.03	20.00	64.60	FH-232	A
J-250	5,000.00	5,000.00	77.00	20.00	66.42	20.00	64.60	FH-232	A
J-245	5,000.00	5,003.50	77.86	20.00	43.22	20.00	38.28	FH-232	A
J-254	5,000.00	5,001.50	79.43	20.00	72.66	20.00	70.23	FH-232	A
J-261	5,000.00	5,001.00	81.25	20.00	78.24	20.00	72.16	J-232	A
J-246	5,000.00	5,000.00	77.82	20.00	38.21	20.00	34.02	FH-232	A
J-247	5,000.00	5,003.00	77.43	20.00	32.39	20.00	32.39	FH-247	A
J-65	5,000.00	5,002.00	78.82	20.00	74.99	20.00	69.36	J-232	A
J-66	5,000.00	5,003.00	79.47	20.00	57.71	20.00	58.21	FH-67	A

Scenario: 2006 Max Day
Fire Flow Analysis
Fire Flow Report

Label	Available Fire Flow (gpm)	Total Flow Available (gpm)	Pressure (psi)	Residual Pressure (psi)	Calculated Residual Pressure (psi)	Minimum Zone Pressure (psi)	Calculated Minimum Zone Pressure (psi)	Minimum Zone Junction	Zone
J-274	5,000.00	5,005.00	81.22	20.00	45.85	20.00	45.85	FH-274	A
J-57	5,000.00	5,002.00	79.82	20.00	59.54	20.00	58.45	J-61	A
J-67	5,000.00	5,001.00	79.60	20.00	53.14	20.00	53.14	FH-67	A
J-62	5,000.00	5,001.50	79.34	20.00	75.02	20.00	68.78	J-232	A
J-63	5,000.00	5,002.00	79.17	20.00	74.94	20.00	68.90	J-232	A
J-64	5,000.00	5,001.00	78.73	20.00	74.87	20.00	69.33	FH-232	A
J-58	5,000.00	5,002.00	79.38	20.00	30.26	20.00	29.62	J-61	A

Scenario: 2006 Max Day
Fire Flow Analysis
Junction Report

Label	Elevation (ft)	Zone	Base Flow (gpm)	Type	Pattern	Demand (Calculated) (gpm)	Calculated Hydraulic Grade (ft)	Pressure (psi)
J-232	2,531.40	A	2.00	Demand	Fixed	2.00	2,699.97	72.93
FH-232	2,531.40	A	0.00	Demand	Fixed	0.00	2,699.97	72.93
J-231	2,531.00	A	2.00	Demand	Fixed	2.00	2,699.97	73.10
J-233	2,528.10	A	2.50	Demand	Fixed	2.50	2,699.97	74.36
J-234	2,527.60	A	4.00	Demand	Fixed	4.00	2,699.97	74.57
FH-234	2,527.60	A	0.00	Demand	Fixed	0.00	2,699.97	74.57
J-235	2,526.10	A	1.00	Demand	Fixed	1.00	2,699.97	75.22
FH-235	2,526.10	A	0.00	Demand	Fixed	0.00	2,699.97	75.22
J-250	2,522.00	A	0.00	Demand	Fixed	0.00	2,699.98	77.00
J-239	2,521.50	A	3.50	Demand	Fixed	3.50	2,699.97	77.21
FH-239	2,521.50	A	0.00	Demand	Fixed	0.00	2,699.97	77.21
J-236	2,521.50	A	0.50	Demand	Fixed	0.50	2,699.97	77.21
FH-247	2,521.00	A	0.00	Demand	Fixed	0.00	2,699.97	77.43
J-247	2,521.00	A	3.00	Demand	Fixed	3.00	2,699.97	77.43
J-240	2,520.80	A	3.50	Demand	Fixed	3.50	2,699.97	77.52
FH-251	2,520.80	A	0.00	Demand	Fixed	0.00	2,699.98	77.52
J-251	2,520.80	A	2.50	Demand	Fixed	2.50	2,699.98	77.52
J-249	2,520.80	A	0.00	Demand	Fixed	0.00	2,699.98	77.52
J-237	2,520.50	A	2.00	Demand	Fixed	2.00	2,699.97	77.65
FH-237	2,520.50	A	0.00	Demand	Fixed	0.00	2,699.97	77.65
J-246	2,520.10	A	0.00	Demand	Fixed	0.00	2,699.97	77.82
J-193	2,520.00	L	0.00	Demand	Fixed	0.00	2,699.96	77.86
J-201	2,520.00	L	6.00	Demand	Fixed	6.00	2,699.96	77.86
J-128	2,520.00	L	0.00	Demand	Fixed	0.00	2,699.96	77.86
J-127	2,520.00	L	0.00	Demand	Fixed	0.00	2,699.96	77.86
J-126	2,520.00	L	0.00	Demand	Fixed	0.00	2,699.96	77.86
FH-206	2,520.00	L	0.00	Demand	Fixed	0.00	2,699.96	77.86
FH-126	2,520.00	L	0.00	Demand	Fixed	0.00	2,699.96	77.86
J-204	2,520.00	L	2.00	Demand	Fixed	2.00	2,699.96	77.86
FH-201	2,520.00	L	0.00	Demand	Fixed	0.00	2,699.96	77.86
J-203	2,520.00	L	3.00	Demand	Fixed	3.00	2,699.96	77.86
FH-128	2,520.00	L	0.00	Demand	Fixed	0.00	2,699.96	77.86
FH-204	2,520.00	L	0.00	Demand	Fixed	0.00	2,699.96	77.86
J-206	2,520.00	L	2.00	Demand	Fixed	2.00	2,699.96	77.86
FH-208	2,520.00	L	0.00	Demand	Fixed	0.00	2,699.96	77.86
J-211	2,520.00	L	0.00	Demand	Fixed	0.00	2,699.96	77.86
J-210	2,520.00	L	0.00	Demand	Fixed	0.00	2,699.96	77.86
J-208	2,520.00	L	0.00	Demand	Fixed	0.00	2,699.96	77.86
J-213	2,520.00	L	0.00	Demand	Fixed	0.00	2,699.96	77.86
FH-213	2,520.00	L	0.00	Demand	Fixed	0.00	2,699.96	77.86
FH-211	2,520.00	L	0.00	Demand	Fixed	0.00	2,699.96	77.86
FH-215	2,520.00	L	0.00	Demand	Fixed	0.00	2,699.96	77.86
J-215	2,520.00	L	0.00	Demand	Fixed	0.00	2,699.96	77.86
J-200	2,520.00	L	5.00	Demand	Fixed	5.00	2,699.96	77.86
J-198	2,520.00	L	0.00	Demand	Fixed	0.00	2,699.96	77.86
FH-198	2,520.00	L	0.00	Demand	Fixed	0.00	2,699.96	77.86
J-195	2,520.00	L	0.00	Demand	Fixed	0.00	2,699.96	77.86
J-197	2,520.00	L	0.00	Demand	Fixed	0.00	2,699.96	77.86
Orchards Well 6	2,520.00	L	0.00	Demand	Fixed	0.00	2,699.96	77.86
J-112	2,520.00	L	0.00	Demand	Fixed	0.00	2,699.96	77.86
J-194	2,520.00	L	0.00	Demand	Fixed	0.00	2,699.96	77.86
FH-241	2,520.00	A	0.00	Demand	Fixed	0.00	2,699.97	77.86

Scenario: 2006 Max Day
Fire Flow Analysis
Junction Report

Label	Elevation (ft)	Zone	Base Flow (gpm)	Type	Pattern	Demand (Calculated) (gpm)	Calculated Hydraulic Grade (ft)	Pressure (psi)
J-242	2,520.00	A	2.50	Demand	Fixed	2.50	2,699.97	77.86
J-241	2,520.00	A	1.50	Demand	Fixed	1.50	2,699.97	77.86
J-243	2,520.00	A	0.00	Demand	Fixed	0.00	2,699.97	77.86
J-245	2,520.00	A	3.50	Demand	Fixed	3.50	2,699.97	77.86
J-238	2,519.50	A	3.00	Demand	Fixed	3.00	2,699.97	78.08
J-244	2,519.50	A	7.00	Demand	Fixed	7.00	2,699.97	78.08
FH-244	2,519.50	A	0.00	Demand	Fixed	0.00	2,699.97	78.08
J-116	2,519.20	L	1.00	Demand	Fixed	1.00	2,699.96	78.20
J-248	2,519.10	A	0.00	Demand	Fixed	0.00	2,699.98	78.26
FH-125	2,519.00	L	0.00	Demand	Fixed	0.00	2,699.96	78.29
J-125	2,519.00	L	0.00	Demand	Fixed	0.00	2,699.96	78.29
J-124	2,519.00	L	0.00	Demand	Fixed	0.00	2,699.96	78.29
J-122	2,519.00	L	0.00	Demand	Fixed	0.00	2,699.96	78.29
J-123	2,519.00	L	0.00	Demand	Fixed	0.00	2,699.96	78.29
FH-122	2,519.00	L	0.00	Demand	Fixed	0.00	2,699.96	78.29
J-192	2,519.00	L	0.00	Demand	Fixed	0.00	2,699.96	78.29
FH-113	2,519.00	L	0.00	Demand	Fixed	0.00	2,699.96	78.29
J-113	2,519.00	L	5.50	Demand	Fixed	5.50	2,699.96	78.29
J-252	2,519.00	A	3.00	Demand	Fixed	3.00	2,699.98	78.30
J-115	2,518.60	L	3.00	Demand	Fixed	3.00	2,699.96	78.46
J-120	2,518.50	L	1.00	Demand	Fixed	1.00	2,699.96	78.51
FH-120	2,518.50	L	0.00	Demand	Fixed	0.00	2,699.96	78.51
J-121	2,518.50	L	4.00	Demand	Fixed	4.00	2,699.96	78.51
FH-121	2,518.50	L	0.00	Demand	Fixed	0.00	2,699.96	78.51
J-72	2,518.50	A	0.00	Demand	Fixed	0.00	2,699.98	78.52
FH-70	2,518.10	A	0.00	Demand	Fixed	0.00	2,699.98	78.69
J-70	2,518.10	A	2.00	Demand	Fixed	2.00	2,699.98	78.69
FH-114	2,518.00	L	0.00	Demand	Fixed	0.00	2,699.96	78.72
J-117	2,518.00	L	2.00	Demand	Fixed	2.00	2,699.96	78.72
J-114	2,518.00	L	6.00	Demand	Fixed	6.00	2,699.96	78.72
J-119	2,518.00	L	6.00	Demand	Fixed	6.00	2,699.96	78.72
J-111	2,518.00	L	12.00	Demand	Fixed	12.00	2,699.96	78.73
J-109	2,518.00	L	5.00	Demand	Fixed	5.00	2,699.96	78.73
J-61	2,518.00	A	1.00	Demand	Fixed	1.00	2,699.98	78.73
J-64	2,518.00	A	1.00	Demand	Fixed	1.00	2,699.98	78.73
FH-64	2,518.00	A	0.00	Demand	Fixed	0.00	2,699.98	78.73
J-65	2,517.80	A	2.00	Demand	Fixed	2.00	2,699.98	78.82
J-59	2,517.60	A	2.00	Demand	Fixed	2.00	2,699.98	78.91
FH-59	2,517.60	A	0.00	Demand	Fixed	0.00	2,699.98	78.91
FH-79	2,517.50	A	0.00	Demand	Fixed	0.00	2,699.98	78.95
J-79	2,517.50	A	3.50	Demand	Fixed	3.50	2,699.98	78.95
J-71	2,517.50	A	2.00	Demand	Fixed	2.00	2,699.98	78.95
J-60	2,517.50	A	1.00	Demand	Fixed	1.00	2,699.98	78.95
FH-60	2,517.50	A	0.00	Demand	Fixed	0.00	2,699.98	78.95
J-73	2,517.30	A	2.00	Demand	Fixed	2.00	2,699.98	79.04
FH-73	2,517.30	A	0.00	Demand	Fixed	0.00	2,699.98	79.04
FH-118	2,517.00	L	0.00	Demand	Fixed	0.00	2,699.96	79.16
J-118	2,517.00	L	7.00	Demand	Fixed	7.00	2,699.96	79.16
FH-110	2,517.00	L	0.00	Demand	Fixed	0.00	2,699.96	79.16
J-110	2,517.00	L	10.00	Demand	Fixed	10.00	2,699.96	79.16
J-108	2,517.00	L	0.00	Demand	Fixed	0.00	2,699.96	79.16
J-106	2,517.00	L	0.50	Demand	Fixed	0.50	2,699.96	79.16

Scenario: 2006 Max Day
Fire Flow Analysis
Junction Report

Label	Elevation (ft)	Zone	Base Flow (gpm)	Type	Pattern	Demand (Calculated) (gpm)	Calculated Hydraulic Grade (ft)	Pressure (psi)
FH-69	2,517.00	A	0.00	Demand	Fixed	0.00	2,699.98	79.17
J-69	2,517.00	A	2.50	Demand	Fixed	2.50	2,699.98	79.17
J-63	2,517.00	A	2.00	Demand	Fixed	2.00	2,699.98	79.17
J-267	2,516.70	A	2.00	Demand	Fixed	2.00	2,699.98	79.30
FH-78	2,516.60	A	0.00	Demand	Fixed	0.00	2,699.98	79.34
J-78	2,516.60	A	2.50	Demand	Fixed	2.50	2,699.98	79.34
J-62	2,516.60	A	1.50	Demand	Fixed	1.50	2,699.98	79.34
FH-62	2,516.60	A	0.00	Demand	Fixed	0.00	2,699.98	79.34
J-68	2,516.50	A	2.00	Demand	Fixed	2.00	2,699.98	79.38
J-107	2,516.50	A	0.50	Demand	Fixed	0.50	2,699.98	79.38
J-158	2,516.50	A	0.00	Demand	Fixed	0.00	2,699.98	79.38
FH-158	2,516.50	A	0.00	Demand	Fixed	0.00	2,699.98	79.38
J-58	2,516.50	A	2.00	Demand	Fixed	2.00	2,699.98	79.38
J-254	2,516.40	A	1.50	Demand	Fixed	1.50	2,699.99	79.43
J-66	2,516.30	A	3.00	Demand	Fixed	3.00	2,699.98	79.47
J-283	2,516.30	A	0.00	Demand	Fixed	0.00	2,699.98	79.47
FH-80	2,516.30	A	0.00	Demand	Fixed	0.00	2,699.98	79.47
J-80	2,516.30	A	3.00	Demand	Fixed	3.00	2,699.98	79.47
FH-105	2,516.00	L	0.00	Demand	Fixed	0.00	2,699.96	79.59
J-105	2,516.00	L	5.00	Demand	Fixed	5.00	2,699.96	79.59
J-67	2,516.00	A	1.00	Demand	Fixed	1.00	2,699.98	79.60
J-76	2,516.00	A	2.00	Demand	Fixed	2.00	2,699.98	79.60
FH-67	2,516.00	A	0.00	Demand	Fixed	0.00	2,699.98	79.60
Eaglefield Well 5	2,516.00	A	0.00	Demand	Fixed	0.00	2,700.00	79.61
FH-74	2,515.80	A	0.00	Demand	Fixed	0.00	2,699.98	79.68
J-74	2,515.80	A	1.50	Demand	Fixed	1.50	2,699.98	79.68
FH-104	2,515.50	L	0.00	Demand	Fixed	0.00	2,699.96	79.81
J-103	2,515.50	L	4.00	Demand	Fixed	4.00	2,699.96	79.81
J-104	2,515.50	L	2.00	Demand	Fixed	2.00	2,699.96	79.81
J-77	2,515.50	A	4.50	Demand	Fixed	4.50	2,699.98	79.81
FH-77	2,515.50	A	0.00	Demand	Fixed	0.00	2,699.98	79.81
J-57	2,515.50	A	2.00	Demand	Fixed	2.00	2,699.98	79.82
FH-57	2,515.50	A	0.00	Demand	Fixed	0.00	2,699.98	79.82
J-56	2,515.50	A	2.00	Demand	Fixed	2.00	2,699.98	79.82
J-253	2,515.00	A	0.00	Demand	Fixed	0.00	2,699.98	80.03
FH-269	2,515.00	A	0.00	Demand	Fixed	0.00	2,699.98	80.03
J-269	2,515.00	A	4.00	Demand	Fixed	4.00	2,699.98	80.03
J-81	2,515.00	A	1.50	Demand	Fixed	1.50	2,699.98	80.03
J-82	2,514.35	A	0.00	Demand	Fixed	0.00	2,699.99	80.32
J-101	2,514.30	L	1.50	Demand	Fixed	1.50	2,699.97	80.33
FH-101	2,514.30	L	0.00	Demand	Fixed	0.00	2,699.97	80.33
J-85	2,514.30	L	4.50	Demand	Fixed	4.50	2,699.98	80.34
J-102	2,514.00	L	5.00	Demand	Fixed	5.00	2,699.96	80.46
FH-102	2,514.00	L	0.00	Demand	Fixed	0.00	2,699.96	80.46
J-266	2,514.00	A	2.00	Demand	Fixed	2.00	2,699.98	80.47
FH-266	2,514.00	A	0.00	Demand	Fixed	0.00	2,699.98	80.47
FH-272	2,514.00	A	0.00	Demand	Fixed	0.00	2,699.98	80.47
J-264	2,514.00	A	4.00	Demand	Fixed	4.00	2,699.98	80.47
J-257	2,514.00	A	3.00	Demand	Fixed	3.00	2,699.99	80.47
J-258	2,514.00	A	0.00	Demand	Fixed	0.00	2,699.99	80.47
J-256	2,514.00	A	2.00	Demand	Fixed	2.00	2,699.99	80.47
J-272	2,513.90	A	1.50	Demand	Fixed	1.50	2,699.98	80.51

Scenario: 2006 Max Day
Fire Flow Analysis
Junction Report

Label	Elevation (ft)	Zone	Base Flow (gpm)	Type	Pattern	Demand (Calculated) (gpm)	Calculated Hydraulic Grade (ft)	Pressure (psi)
FH-86	2,513.50	L	0.00	Demand	Fixed	0.00	2,699.98	80.68
J-86	2,513.50	L	1.00	Demand	Fixed	1.00	2,699.98	80.68
J-84	2,513.50	L	1.00	Demand	Fixed	1.00	2,699.98	80.68
J-255	2,513.50	A	3.00	Demand	Fixed	3.00	2,699.99	80.68
FH-255	2,513.50	A	0.00	Demand	Fixed	0.00	2,699.99	80.68
J-259	2,513.50	A	0.00	Demand	Fixed	0.00	2,699.99	80.68
J-98	2,513.00	L	0.00	Demand	Fixed	0.00	2,699.97	80.89
J-99	2,513.00	L	0.00	Demand	Fixed	0.00	2,699.97	80.89
J-87	2,513.00	L	0.00	Demand	Fixed	0.00	2,699.98	80.90
J-262	2,513.00	A	2.00	Demand	Fixed	2.00	2,699.99	80.90
Legacy Well 4	2,513.00	A	0.00	Demand	Fixed	0.00	2,700.00	80.91
J-282	2,512.50	A	3.00	Demand	Fixed	3.00	2,699.98	81.11
J-278	2,512.50	A	3.00	Demand	Fixed	3.00	2,699.98	81.11
J-270	2,512.50	A	4.00	Demand	Fixed	4.00	2,699.98	81.11
FH-270	2,512.50	A	0.00	Demand	Fixed	0.00	2,699.98	81.11
J-260	2,512.40	A	4.00	Demand	Fixed	4.00	2,699.99	81.16
J-276	2,512.30	A	7.00	Demand	Fixed	7.00	2,699.99	81.20
FH-276	2,512.30	A	0.00	Demand	Fixed	0.00	2,699.99	81.20
FH-274	2,512.25	A	0.00	Demand	Fixed	0.00	2,699.98	81.22
J-274	2,512.25	A	5.00	Demand	Fixed	5.00	2,699.98	81.22
J-261	2,512.20	A	1.00	Demand	Fixed	1.00	2,699.99	81.25
FH-261	2,512.20	A	0.00	Demand	Fixed	0.00	2,699.99	81.25
FH-279	2,512.10	A	0.00	Demand	Fixed	0.00	2,699.98	81.29
J-279	2,512.10	A	4.00	Demand	Fixed	4.00	2,699.98	81.29
J-275	2,512.10	A	3.50	Demand	Fixed	3.50	2,699.98	81.29
J-100	2,512.00	L	0.00	Demand	Fixed	0.00	2,699.97	81.32
J-148	2,512.00	L	0.00	Demand	Fixed	0.00	2,699.98	81.33
FH-148	2,512.00	L	0.00	Demand	Fixed	0.00	2,699.98	81.33
J-280	2,512.00	A	4.00	Demand	Fixed	4.00	2,699.98	81.33
J-88	2,512.00	L	0.00	Demand	Fixed	0.00	2,699.98	81.33
FH-268	2,512.00	A	0.00	Demand	Fixed	0.00	2,699.98	81.33
J-268	2,512.00	A	3.50	Demand	Fixed	3.50	2,699.98	81.33
J-265	2,512.00	A	1.50	Demand	Fixed	1.50	2,699.98	81.33
J-273	2,512.00	A	2.00	Demand	Fixed	2.00	2,699.98	81.33
J-271	2,511.90	A	2.50	Demand	Fixed	2.50	2,699.98	81.37
J-281	2,511.50	A	1.00	Demand	Fixed	1.00	2,699.98	81.55
FH-281	2,511.50	A	0.00	Demand	Fixed	0.00	2,699.98	81.55
J-277	2,511.50	A	4.00	Demand	Fixed	4.00	2,699.98	81.55
FH-277	2,511.50	A	0.00	Demand	Fixed	0.00	2,699.98	81.55
FH-97	2,510.00	L	0.00	Demand	Fixed	0.00	2,699.97	82.19
J-97	2,510.00	L	0.00	Demand	Fixed	0.00	2,699.97	82.19
J-91	2,510.00	L	0.00	Demand	Fixed	0.00	2,699.98	82.19
FH-89	2,510.00	L	0.00	Demand	Fixed	0.00	2,699.98	82.19
J-89	2,510.00	L	0.00	Demand	Fixed	0.00	2,699.98	82.19
J-96	2,508.00	L	0.00	Demand	Fixed	0.00	2,699.97	83.06
FH-96	2,508.00	L	0.00	Demand	Fixed	0.00	2,699.97	83.06
J-90	2,508.00	L	0.00	Demand	Fixed	0.00	2,699.98	83.06
J-95	2,506.00	L	0.00	Demand	Fixed	0.00	2,699.97	83.92
J-94	2,506.00	L	0.00	Demand	Fixed	0.00	2,699.97	83.92
J-145	2,506.00	L	0.00	Demand	Fixed	0.00	2,699.97	83.92
FH-145	2,506.00	L	0.00	Demand	Fixed	0.00	2,699.97	83.92
J-93	2,506.00	L	0.00	Demand	Fixed	0.00	2,699.97	83.92

Scenario: 2006 Max Day
Fire Flow Analysis
Junction Report

Label	Elevation (ft)	Zone	Base Flow (gpm)	Type	Pattern	Demand (Calculated) (gpm)	Calculated Hydraulic Grade (ft)	Pressure (psi)
J-92	2,506.00	L	0.00	Demand	Fixed	0.00	2,699.97	83.92

EAST HILLS RESERVOIR
AT BOTTOM OF MAX-day
CAPACITY (USE 2815)
-ALL PUMPS OFF

Scenario: 2006 Max Day
Fire Flow Analysis
Fire Flow Report

Label	Available Fire Flow (gpm)	Total Flow Available (gpm)	Pressure (psi)	Residual Pressure (psi)	Calculated Residual Pressure (psi)	Minimum Zone Pressure (psi)	Calculated Minimum Zone Pressure (psi)	Minimum Zone Junction	Zone
J-20	1,487.9	1,492.4	52.4	20.0	20.0	20.0	41.3	J-2	C
J-33	1,646.1	1,651.6	62.3	20.0	20.0	20.0	41.0	J-2	C
J-28	1,725.4	1,729.4	59.3	20.0	20.0	20.0	40.9	J-2	C
J-84	1,742.2	1,745.2	62.5	20.0	20.0	20.0	31.7	J-83	C
FH-238	1,745.0	1,745.0	70.1	20.0	20.0	20.0	31.0	J-238	B
J-91	1,771.3	1,775.3	71.5	20.0	20.0	20.0	40.6	J-5	C
J-98	1,786.4	1,790.4	70.3	20.0	20.0	20.0	40.6	J-5	C
J-128	1,836.1	1,839.6	67.4	20.0	20.0	20.0	30.9	J-127	C
FH-242	1,874.3	1,874.3	65.8	20.0	20.0	20.0	29.6	J-229	B
FH-237	1,874.6	1,874.6	72.7	20.0	20.0	20.0	31.0	J-237	B
J-42	1,925.2	1,927.2	65.2	20.0	20.0	20.0	40.2	J-41	C
J-233	1,940.3	1,942.8	64.9	20.0	20.0	20.0	35.9	J-229	B
J-238	1,944.4	1,947.4	70.1	20.0	20.0	20.0	20.0	FH-238	B
J-59	1,947.5	1,952.5	54.7	20.0	20.0	20.0	23.0	J-58	C
J-143	1,989.4	1,994.9	73.1	20.0	20.0	20.0	40.0	J-5	C
J-76	2,011.8	2,015.3	69.0	20.0	20.0	20.0	38.7	J-58	C
FH-239	2,016.8	2,016.8	70.1	20.0	20.0	20.0	28.6	J-229	B
J-213	2,055.2	2,059.7	78.7	20.0	20.0	20.0	32.9	J-212	B
J-229	2,057.9	2,057.9	64.5	20.0	20.0	20.0	22.3	J-242	B
J-83	2,059.1	2,061.6	63.4	20.0	20.9	20.0	20.0	J-84	C
J-71	2,062.3	2,064.3	67.7	20.0	20.0	20.0	36.2	J-70	C
J-43	2,067.9	2,069.9	64.7	20.0	20.0	20.0	37.2	J-58	C
J-58	2,072.7	2,076.2	49.1	20.0	20.0	20.0	25.6	J-59	C
J-237	2,078.6	2,080.1	72.7	20.0	20.0	20.0	20.0	FH-237	B
J-242	2,079.2	2,081.2	65.8	20.0	21.3	20.0	20.0	J-229	B
J-241	2,112.4	2,114.4	70.1	20.0	25.7	20.0	20.0	J-229	B
J-236	2,131.1	2,132.6	72.7	20.0	22.6	20.0	20.0	FH-238	B
J-127	2,134.8	2,139.3	67.4	20.0	20.0	20.0	20.0	J-128	C
J-45	2,152.7	2,154.7	62.1	20.0	20.0	20.0	36.5	J-58	C
J-240	2,161.9	2,163.9	70.1	20.0	25.7	20.0	20.0	J-229	B
J-239	2,211.5	2,214.5	70.1	20.0	25.7	20.0	20.0	J-229	B
J-214	2,218.2	2,223.2	81.3	20.0	20.0	20.0	28.7	J-213	B
J-212	2,243.4	2,246.9	81.3	20.0	22.6	20.0	20.0	J-213	B
J-235	2,244.2	2,244.7	71.4	20.0	26.9	20.0	20.0	J-229	B
J-221	2,269.0	2,269.0	91.0	20.0	20.0	20.0	33.0	J-187	C-Trans
J-211	2,271.2	2,274.2	81.3	20.0	22.6	20.0	20.0	J-213	B
J-95	2,292.6	2,296.1	60.3	20.0	20.0	20.0	38.6	J-110	C
J-149	2,321.8	2,330.8	73.0	20.0	20.0	20.0	36.9	J-110	C
J-232	2,334.2	2,342.7	70.1	20.0	25.7	20.0	20.0	J-229	B
J-126	2,338.8	2,342.3	67.4	20.0	20.0	20.0	20.0	J-128	C
J-51	2,357.2	2,360.2	63.5	20.0	20.0	20.0	36.1	J-58	C
J-210	2,386.2	2,389.7	81.3	20.0	22.6	20.0	20.0	J-213	B
J-166	2,401.6	2,405.6	61.4	20.0	20.0	20.0	34.2	J-167	B
J-110	2,423.7	2,428.2	49.5	20.0	20.0	20.0	37.3	J-109	C
J-179	2,438.3	2,442.3	65.8	20.0	20.0	20.0	31.4	J-178	B
J-56	2,458.7	2,463.2	57.8	20.0	20.0	20.0	28.3	J-58	C
J-87	2,464.9	2,467.4	67.7	20.0	20.0	20.0	36.5	J-58	C
J-121	2,507.8	2,511.8	70.1	20.0	20.0	20.0	22.2	J-120	C
J-220	2,510.7	2,510.7	96.6	20.0	25.6	20.0	20.0	J-221	C-Trans
J-120	2,526.0	2,530.5	70.1	20.0	20.0	20.0	21.4	J-121	C

Scenario: 2006 Max Day
Fire Flow Analysis
Fire Flow Report

Label	Available Fire Flow (gpm)	Total Flow Available (gpm)	Pressure (psi)	Residual Pressure (psi)	Calculated Residual Pressure (psi)	Minimum Zone Pressure (psi)	Calculated Minimum Zone Pressure (psi)	Minimum Zone Junction	Zone
J-219	2,528.2	2,528.2	96.6	20.0	25.6	20.0	20.0	J-221	C-Trans
J-218	2,535.1	2,535.1	96.6	20.0	25.6	20.0	20.0	J-221	C-Trans
J-216	2,535.1	2,535.1	96.6	20.0	23.9	20.0	20.0	J-221	C-Trans
Brookwood Well 3	2,535.1	2,535.1	94.7	20.0	21.4	20.0	20.0	J-221	C-Trans
J-209	2,536.2	2,538.2	81.3	20.0	22.6	20.0	20.0	J-213	B
J-215	2,555.0	2,555.0	96.6	20.0	25.6	20.0	20.0	J-221	C-Trans
J-208	2,562.5	2,562.5	81.3	20.0	22.6	20.0	20.0	J-213	B
UWI Emergency Int	2,573.6	2,573.6	79.8	20.0	20.0	20.0	20.0	UWI Emerge	UWI
J-70	2,574.3	2,575.8	68.6	20.0	20.9	20.0	20.0	J-71	C
J-41	2,592.4	2,594.9	67.0	20.0	21.7	20.0	20.0	J-42	C
J-35	2,594.4	2,596.4	64.9	20.0	20.0	20.0	37.0	J-58	C
J-187	2,613.5	2,613.5	79.8	20.0	20.0	20.0	26.0	J-168	C-Trans
J-171	2,619.4	2,622.4	67.5	20.0	20.0	20.0	33.2	J-170	B
J-150	2,651.2	2,653.2	58.8	20.0	20.0	20.0	21.6	J-151	B
J-151	2,657.2	2,658.2	58.8	20.0	20.0	20.0	20.4	J-152	B
J-152	2,659.3	2,663.3	58.8	20.0	20.0	20.0	20.3	J-151	B
J-40	2,661.3	2,664.3	67.4	20.0	22.2	20.0	20.0	J-42	C
J-57	2,723.9	2,726.4	51.7	20.0	22.6	20.0	20.0	J-58	C
J-60	2,744.9	2,748.9	51.7	20.0	22.1	20.0	20.0	J-58	C
J-178	2,760.1	2,764.6	65.8	20.0	20.0	20.0	20.0	J-179	B
J-167	2,768.3	2,770.3	61.4	20.0	20.0	20.0	23.0	J-166	B
J-153	2,773.3	2,777.3	60.6	20.0	20.0	20.0	21.9	J-152	B
J-68	2,790.9	2,792.9	66.4	20.0	20.0	20.0	31.7	J-58	C
J-122	2,791.8	2,796.3	70.0	20.0	20.0	20.0	29.1	J-121	C
J-168	2,792.5	2,792.5	75.5	20.0	20.0	20.0	24.3	J-187	C-Trans
J-177	2,828.5	2,830.0	65.8	20.0	20.0	20.0	20.0	J-179	B
J-140	2,828.6	2,833.6	73.1	20.0	20.0	20.0	33.1	J-110	C
J-156	2,835.3	2,839.3	58.8	20.0	20.0	20.0	24.5	J-157	B
J-165	2,859.8	2,863.8	60.6	20.0	20.0	20.0	23.8	J-166	B
J-164	2,861.7	2,863.7	61.4	20.0	20.0	20.0	20.0	J-166	B
J-157	2,881.7	2,884.7	60.1	20.0	20.0	20.0	20.6	J-158	B
J-190	2,884.8	2,888.8	71.4	20.0	20.0	20.0	22.2	J-189	B
J-158	2,886.1	2,889.6	60.1	20.0	20.0	20.0	20.4	J-157	B
J-154	2,933.3	2,936.8	60.1	20.0	20.0	20.0	20.8	J-155	B
J-189	2,943.8	2,946.8	70.1	20.0	20.0	20.0	21.3	J-190	B
J-155	2,950.0	2,953.0	60.1	20.0	20.0	20.0	20.2	J-154	B
J-79	2,950.5	2,955.0	73.3	20.0	20.0	20.0	24.3	J-80	C
J-163	2,957.2	2,963.2	63.2	20.0	20.0	20.0	22.0	J-166	B
J-159	2,968.0	2,970.0	58.8	20.0	20.0	20.0	23.8	J-158	B
J-173	2,971.7	2,976.2	64.5	20.0	20.0	20.0	24.4	J-174	B
J-80	2,976.6	2,980.6	73.3	20.0	20.0	20.0	23.4	J-79	C
J-55	3,002.7	3,005.7	54.7	20.0	23.1	20.0	20.0	J-58	C
Lexington Well 2	3,013.9	3,013.9	69.6	20.0	20.0	20.0	22.9	J-130	C
J-207	3,014.2	3,016.2	81.3	20.0	22.6	20.0	20.0	J-213	B
J-174	3,016.8	3,019.3	64.5	20.0	20.0	20.0	22.7	J-173	B
J-170	3,033.7	3,039.2	65.8	20.0	20.0	20.0	21.7	J-171	B
J-54	3,036.0	3,038.5	55.2	20.0	23.4	20.0	20.0	J-58	C
J-61	3,038.8	3,042.3	58.6	20.0	25.2	20.0	20.0	J-58	C
Lexington Well 1	3,046.7	3,046.7	75.6	20.0	20.0	20.0	20.8	J-147	C
J-147	3,071.0	3,074.5	75.6	20.0	20.0	20.0	20.0	Lexington W	C

Scenario: 2006 Max Day
Fire Flow Analysis
Fire Flow Report

Label	Available Fire Flow (gpm)	Total Flow Available (gpm)	Pressure (psi)	Residual Pressure (psi)	Calculated Residual Pressure (psi)	Minimum Zone Pressure (psi)	Calculated Minimum Zone Pressure (psi)	Minimum Zone Junction	Zone
J-146	3,097.4	3,100.4	75.6	20.0	20.0	20.0	20.0	J-147	C
J-130	3,104.7	3,109.7	70.0	20.0	20.4	20.0	20.0	Lexington W	C
J-206	3,118.5	3,122.5	74.4	20.0	20.0	20.0	23.7	J-160	B
J-222	3,122.2	3,122.7	75.5	20.0	20.0	20.0	20.0	J-168	C-Trans
J-78	3,124.7	3,127.7	71.6	20.0	20.0	20.0	21.7	J-79	C
J-145	3,152.6	3,153.1	75.6	20.0	20.5	20.0	20.0	J-149	C
J-144	3,152.6	3,160.6	74.3	20.0	21.3	20.0	20.0	J-149	C
J-185	3,154.0	3,158.0	64.5	20.0	20.0	20.0	23.8	J-134	B
J-172	3,172.3	3,177.3	61.9	20.0	20.0	20.0	22.2	J-160	B
J-134	3,174.1	3,176.1	57.5	20.0	20.0	20.0	21.0	J-224	B
J-224	3,183.7	3,185.2	58.4	20.0	20.4	20.0	20.0	J-134	B
J-162	3,201.6	3,206.6	63.2	20.0	20.0	20.0	20.9	J-134	B
J-117	3,208.0	3,213.5	61.5	20.0	20.0	20.0	25.8	J-110	C
J-169	3,213.6	3,227.1	60.1	20.0	20.7	20.0	20.0	J-134	B
J-175	3,219.0	3,223.0	63.2	20.0	20.0	20.0	21.1	J-176	B
J-160	3,222.2	3,222.2	60.1	20.0	20.0	20.0	20.7	J-134	B
J-234	3,231.3	3,243.3	60.1	20.0	20.0	20.0	20.1	J-134	B
J-161	3,234.8	3,238.3	61.4	20.0	20.5	20.0	20.0	J-160	B
J-176	3,236.2	3,236.2	63.2	20.0	20.0	20.0	20.5	J-175	B
J-231	3,243.4	3,252.9	71.8	20.0	27.9	20.0	20.0	J-160	B
J-180	3,245.7	3,245.7	64.5	20.0	21.2	20.0	20.0	J-176	B
J-205	3,248.1	3,252.6	78.7	20.0	20.0	20.0	20.3	J-160	B
J-204	3,250.8	3,253.3	74.4	20.0	28.7	20.0	20.0	J-160	B
J-203	3,251.1	3,254.6	74.4	20.0	28.7	20.0	20.0	J-160	B
J-202	3,254.2	3,255.7	77.0	20.0	31.1	20.0	20.0	J-160	B
J-201	3,255.6	3,256.6	78.7	20.0	32.8	20.0	20.0	J-160	B
J-200	3,256.0	3,259.5	78.7	20.0	32.8	20.0	20.0	J-160	B
J-199	3,259.4	3,260.9	80.0	20.0	34.0	20.0	20.0	J-160	B
J-198	3,259.9	3,262.4	80.0	20.0	34.0	20.0	20.0	J-160	B
J-197	3,264.8	3,267.8	80.5	20.0	34.6	20.0	20.0	J-160	B
J-196	3,265.6	3,266.1	80.5	20.0	34.6	20.0	20.0	J-160	B
J-195	3,267.0	3,267.0	81.3	20.0	35.5	20.0	20.0	J-160	B
J-186	3,267.1	3,269.1	64.5	20.0	21.0	20.0	20.0	J-176	B
J-193	3,273.5	3,278.5	78.3	20.0	32.9	20.0	20.0	J-160	B
J-44	3,277.2	3,279.7	64.7	20.0	22.6	20.0	20.0	J-45	C
J-192	3,284.7	3,295.7	70.1	20.0	25.6	20.0	20.0	J-160	B
J-191	3,289.2	3,290.7	68.8	20.0	24.6	20.0	20.0	J-160	B
J-133	3,290.1	3,293.1	70.0	20.0	20.0	20.0	24.4	J-132	C
J-188	3,291.2	3,291.2	68.8	20.0	24.8	20.0	20.0	J-160	B
J-181	3,292.2	3,293.7	66.6	20.0	22.6	20.0	20.0	J-176	B
J-182	3,295.9	3,296.9	67.5	20.0	23.9	20.0	20.0	J-160	B
J-183	3,305.4	3,309.9	65.8	20.0	22.0	20.0	20.0	J-160	B
J-184	3,313.0	3,313.0	65.3	20.0	21.3	20.0	20.0	J-160	B
J-77	3,379.1	3,379.1	71.6	20.0	20.0	20.0	21.3	J-76	C
J-125	3,408.0	3,411.5	69.6	20.0	22.2	20.0	20.0	J-128	C
J-124	3,421.8	3,422.8	68.7	20.0	21.1	20.0	20.0	J-128	C
J-75	3,431.9	3,434.4	71.1	20.0	22.2	20.0	20.0	J-76	C
J-132	3,454.9	3,455.9	70.4	20.0	20.4	20.0	20.0	J-133	C
J-53	3,463.2	3,465.7	57.8	20.0	27.2	20.0	20.0	J-58	C
J-129	3,464.4	3,467.4	70.0	20.0	20.4	20.0	20.0	Lexington W	C

Scenario: 2006 Max Day
Fire Flow Analysis
Fire Flow Report

Label	Available Fire Flow (gpm)	Total Flow Available (gpm)	Pressure (psi)	Residual Pressure (psi)	Calculated Residual Pressure (psi)	Minimum Zone Pressure (psi)	Calculated Minimum Zone Pressure (psi)	Minimum Zone Junction	Zone
J-74	3,468.5	3,469.5	70.3	20.0	21.3	20.0	20.0	J-76	C
J-123	3,471.2	3,475.2	68.7	20.0	20.6	20.0	20.0	J-128	C
J-62	3,476.6	3,480.6	60.4	20.0	28.8	20.0	20.0	J-58	C
J-135	3,478.2	3,482.7	71.3	20.0	20.0	20.0	21.8	J-133	C
J-109	3,507.5	3,508.5	53.4	20.0	23.9	20.0	20.0	J-110	C
J-114	3,508.6	3,512.6	60.2	20.0	20.0	20.0	21.5	J-117	C
J-136	3,528.2	3,529.2	73.0	20.0	20.3	20.0	20.0	J-135	C
J-113	3,536.3	3,538.3	57.7	20.0	20.0	20.0	21.1	J-110	C
J-137	3,537.3	3,538.8	73.0	20.0	20.1	20.0	20.0	J-135	C
J-119	3,561.8	3,564.3	70.1	20.0	21.0	20.0	20.0	J-128	C
J-48	3,565.1	3,568.1	59.1	20.0	29.3	20.0	20.0	J-58	C
J-115	3,566.9	3,574.9	67.5	20.0	22.7	20.0	20.0	J-114	C
J-138	3,569.6	3,572.6	74.3	20.0	21.3	20.0	20.0	J-149	C
J-111	3,572.4	3,573.9	55.5	20.0	20.7	20.0	20.0	J-110	C
J-112	3,577.7	3,580.2	55.5	20.0	20.2	20.0	20.0	J-110	C
J-47	3,578.1	3,580.1	59.9	20.0	29.2	20.0	20.0	J-58	C
J-118	3,582.1	3,584.1	70.1	20.0	20.8	20.0	20.0	J-128	C
J-46	3,584.5	3,586.5	61.7	20.0	31.4	20.0	20.0	J-58	C
J-116	3,602.0	3,609.5	68.8	20.0	23.2	20.0	20.0	J-117	C
J-73	3,602.7	3,602.7	70.3	20.0	21.3	20.0	20.0	J-76	C
J-72	3,655.0	3,655.5	70.3	20.0	21.3	20.0	20.0	J-76	C
J-63	3,657.1	3,658.1	63.4	20.0	32.1	20.0	20.0	J-58	C
J-39	3,707.1	3,708.1	67.8	20.0	22.6	20.0	20.0	J-42	C
J-69	3,707.3	3,707.8	70.3	20.0	22.6	20.0	20.0	J-71	C
J-139	3,712.5	3,716.5	73.1	20.0	20.0	20.0	21.8	J-140	C
J-64	3,712.6	3,714.1	64.2	20.0	32.2	20.0	20.0	J-58	C
J-49	3,732.8	3,735.3	61.7	20.0	30.1	20.0	20.0	J-58	C
J-141	3,783.3	3,788.8	71.4	20.0	20.0	20.0	21.7	J-143	C
J-108	3,783.6	3,785.1	53.0	20.0	23.4	20.0	20.0	J-110	C
J-66	3,812.9	3,813.4	67.7	20.0	28.5	20.0	20.0	J-58	C
J-67	3,812.9	3,813.9	67.7	20.0	27.5	20.0	20.0	J-58	C
J-65	3,813.1	3,814.1	66.0	20.0	32.7	20.0	20.0	J-58	C
J-32	3,828.1	3,831.1	60.6	20.0	20.0	20.0	30.8	J-58	C
J-142	3,835.5	3,836.5	71.4	20.0	20.0	20.0	20.5	J-141	C
J-99	3,838.0	3,841.0	65.5	20.0	20.0	20.0	24.3	J-110	C
J-50	3,864.3	3,866.8	63.0	20.0	30.3	20.0	20.0	J-58	C
J-81	3,927.1	3,927.6	65.5	20.0	31.0	20.0	20.0	J-58	C
J-97	3,930.3	3,935.3	67.7	20.0	20.0	20.0	21.7	J-99	C
J-82	3,959.4	3,960.4	66.4	20.0	31.6	20.0	20.0	J-58	C
J-92	3,992.2	3,993.2	73.2	20.0	20.8	20.0	20.0	J-142	C
J-52	3,993.2	3,995.2	64.8	20.0	31.1	20.0	20.0	J-58	C
J-96	4,003.4	4,006.9	66.8	20.0	20.0	20.0	22.6	J-110	C
J-90	4,015.0	4,018.5	73.2	20.0	21.7	20.0	20.0	J-91	C
J-38	4,038.1	4,038.6	67.8	20.0	22.6	20.0	20.0	J-42	C
J-104	4,075.9	4,077.9	54.8	20.0	25.2	20.0	20.0	J-110	C
J-85	4,077.7	4,079.7	65.9	20.0	30.1	20.0	20.0	J-58	C
J-37	4,086.1	4,088.6	64.8	20.0	30.5	20.0	20.0	J-58	C
J-86	4,122.8	4,124.3	68.1	20.0	28.1	20.0	20.0	J-58	C
J-88	4,135.1	4,138.6	68.9	20.0	27.8	20.0	20.0	J-58	C
J-5	4,135.8	4,138.8	43.8	20.0	20.0	20.0	22.2	J-6	C

Scenario: 2006 Max Day
Fire Flow Analysis
Fire Flow Report

Label	Available Fire Flow (gpm)	Total Flow Available (gpm)	Pressure (psi)	Residual Pressure (psi)	Calculated Residual Pressure (psi)	Minimum Zone Pressure (psi)	Calculated Minimum Zone Pressure (psi)	Minimum Zone Junction	Zone
J-103	4,160.4	4,163.9	57.8	20.0	22.8	20.0	20.0	J-110	C
J-100	4,166.5	4,168.5	60.8	20.0	20.0	20.0	20.6	J-110	C
J-102	4,169.3	4,172.3	58.6	20.0	23.0	20.0	20.0	J-110	C
J-36	4,204.6	4,204.6	64.8	20.0	29.9	20.0	20.0	J-58	C
J-101	4,212.9	4,213.9	60.8	20.0	23.0	20.0	20.0	J-110	C
J-89	4,213.3	4,216.8	73.2	20.0	21.5	20.0	20.0	J-110	C
J-93	4,216.8	4,219.3	65.1	20.0	26.4	20.0	20.0	J-58	C
J-6	4,235.8	4,245.8	45.1	20.0	20.4	20.0	20.0	J-5	C
J-94	4,249.7	4,252.7	63.4	20.0	24.4	20.0	20.0	J-110	C
J-105	4,277.2	4,279.2	51.4	20.0	21.4	20.0	20.0	J-110	C
J-107	4,288.2	4,291.2	47.9	20.0	20.0	20.0	22.2	J-110	C
J-106	4,291.4	4,293.4	50.9	20.0	20.9	20.0	20.0	J-110	C
J-14	4,376.5	4,379.5	44.3	20.0	20.0	20.0	29.7	J-13	C
J-13	4,434.2	4,438.7	47.3	20.0	20.0	20.0	26.3	J-14	C
J-34	4,470.7	4,472.2	63.6	20.0	27.5	20.0	20.0	J-58	C
J-19	4,512.5	4,515.0	55.0	20.0	22.6	20.0	20.0	J-20	C
J-18	4,561.1	4,565.1	55.0	20.0	22.3	20.0	20.0	J-20	C
J-21	4,663.4	4,665.9	56.3	20.0	21.1	20.0	20.0	J-20	C
J-24	4,665.8	4,669.8	58.9	20.0	20.0	20.0	20.8	J-25	C
J-22	4,687.6	4,692.1	56.3	20.0	20.7	20.0	20.0	J-20	C
J-25	4,690.3	4,693.8	59.3	20.0	20.0	20.0	20.0	J-24	C
J-29	4,701.4	4,701.4	63.2	20.0	26.5	20.0	20.0	J-58	C
J-30	4,747.5	4,750.0	62.3	20.0	24.1	20.0	20.0	J-58	C
J-27	4,751.7	4,754.7	61.9	20.0	22.6	20.0	20.0	J-28	C
J-26	4,777.1	4,781.1	61.4	20.0	21.6	20.0	20.0	J-28	C
J-4	4,804.3	4,809.3	43.5	20.0	20.0	20.0	25.5	J-5	C
J-31	4,854.8	4,858.8	59.3	20.0	20.0	20.0	23.3	J-23	C
J-11	5,000.0	5,003.0	46.0	20.0	23.1	20.0	25.6	J-14	C
J-15	5,000.0	5,003.0	50.8	20.0	35.9	20.0	30.7	J-14	C
J-23	5,000.0	5,003.0	59.3	20.0	20.0	20.0	20.9	J-31	C
J-10	5,000.0	5,001.0	45.6	20.0	24.0	20.0	23.7	J-14	C
J-9	5,000.0	5,002.0	45.2	20.0	27.2	20.0	27.6	J-8	C
J-8	5,000.0	5,002.5	45.1	20.0	24.1	20.0	26.0	J-7	C
J-12	5,000.0	5,004.5	49.5	20.0	30.8	20.0	27.3	J-14	C
J-16	5,000.0	5,001.5	58.1	20.0	29.1	20.0	23.8	J-20	C
J-17	5,000.0	5,004.0	58.1	20.0	28.0	20.0	23.0	J-20	C
J-7	5,000.0	5,004.0	45.1	20.0	20.2	20.0	23.7	J-107	C
J-3	5,000.0	5,002.5	43.9	20.0	30.9	20.0	30.5	J-4	C
J-2	5,000.0	5,000.0	42.6	20.0	31.2	20.0	32.1	J-4	C
J-1	5,000.0	5,000.0	50.0	20.0	41.9	20.0	34.5	J-2	C

EAST HILLS RESERVOIR
FULL CAPACITY (WSE 283
-ALL PUMPS OFF

Scenario: 2006 Max Day
Fire Flow Analysis
Fire Flow Report

Label	Available Fire Flow (gpm)	Total Flow Available (gpm)	Pressure (psi)	Residual Pressure (psi)	Calculated Residual Pressure (psi)	Minimum Zone Pressure (psi)	Calculated Minimum Zone Pressure (psi)	Minimum Zone Junction	Zone
J-20	1,646.9	1,651.4	58.9	20.0	20.0	20.0	47.5	J-2	C
J-33	1,781.7	1,787.2	68.8	20.0	20.0	20.0	47.3	J-2	C
FH-238	1,806.9	1,806.9	70.1	20.0	20.0	20.0	31.8	J-238	B
J-28	1,878.4	1,882.4	65.8	20.0	20.0	20.0	47.2	J-2	C
J-84	1,887.0	1,890.0	69.0	20.0	20.0	20.0	33.4	J-83	C
J-91	1,893.7	1,897.7	77.9	20.0	20.0	20.0	46.8	J-5	C
J-98	1,911.6	1,915.6	76.8	20.0	20.0	20.0	46.7	J-5	C
FH-237	1,963.5	1,963.5	72.7	20.0	20.0	20.0	32.1	J-237	B
J-128	1,973.4	1,976.9	73.9	20.0	20.0	20.0	32.4	J-127	C
FH-242	1,975.8	1,975.8	65.8	20.0	20.0	20.0	30.8	J-229	B
J-238	2,054.1	2,057.1	70.1	20.0	20.0	20.0	20.0	FH-238	B
J-233	2,059.5	2,062.0	64.9	20.0	20.0	20.0	37.8	J-229	B
J-42	2,074.5	2,076.5	71.7	20.0	20.0	20.0	43.0	J-41	C
J-143	2,118.6	2,124.1	79.6	20.0	20.0	20.0	45.7	J-110	C
FH-239	2,128.7	2,128.7	70.1	20.0	20.0	20.0	30.3	J-229	B
J-59	2,146.0	2,151.0	61.2	20.0	20.0	20.0	24.7	J-58	C
J-213	2,157.0	2,161.5	78.7	20.0	20.0	20.0	33.9	J-212	B
J-76	2,157.3	2,160.8	75.5	20.0	20.0	20.0	44.0	J-58	C
J-229	2,186.3	2,186.3	64.5	20.0	20.0	20.0	22.5	J-242	B
J-237	2,191.1	2,192.6	72.7	20.0	20.0	20.0	20.0	FH-237	B
J-242	2,208.9	2,210.9	65.8	20.0	21.3	20.0	20.0	J-229	B
J-71	2,215.5	2,217.5	74.2	20.0	20.0	20.0	38.4	J-70	C
J-83	2,231.2	2,233.7	69.8	20.0	20.9	20.0	20.0	J-84	C
J-43	2,231.5	2,233.5	71.2	20.0	20.0	20.0	42.2	J-56	C
J-241	2,244.6	2,246.6	70.1	20.0	25.7	20.0	20.0	J-229	B
J-236	2,252.8	2,254.3	72.7	20.0	22.6	20.0	20.0	J-238	B
J-240	2,297.4	2,299.4	70.1	20.0	25.7	20.0	20.0	J-229	B
J-127	2,298.3	2,302.8	73.9	20.0	20.0	20.0	20.0	J-128	C
J-214	2,324.4	2,329.4	81.3	20.0	20.0	20.0	29.7	J-213	B
J-58	2,326.9	2,330.4	55.6	20.0	20.0	20.0	25.6	J-59	C
J-45	2,333.9	2,335.9	68.6	20.0	20.0	20.0	41.2	J-58	C
J-239	2,350.3	2,353.3	70.1	20.0	25.7	20.0	20.0	J-229	B
J-212	2,355.5	2,359.0	81.3	20.0	22.6	20.0	20.0	J-213	B
J-221	2,383.4	2,383.4	97.5	20.0	20.0	20.0	35.4	J-187	C-Trans
J-235	2,384.7	2,385.2	71.4	20.0	27.0	20.0	20.0	J-229	B
J-211	2,384.7	2,387.7	81.3	20.0	22.6	20.0	20.0	J-213	B
J-149	2,481.0	2,490.0	79.5	20.0	20.0	20.0	42.0	J-110	C
J-232	2,481.1	2,489.6	70.1	20.0	25.7	20.0	20.0	J-229	B
J-95	2,495.0	2,498.5	66.8	20.0	20.0	20.0	43.6	J-110	C
J-210	2,505.8	2,509.3	81.3	20.0	22.6	20.0	20.0	J-213	B
J-126	2,518.5	2,522.0	73.9	20.0	20.0	20.0	20.0	J-128	C
J-51	2,549.3	2,552.3	70.0	20.0	20.0	20.0	40.8	J-58	C
J-166	2,561.0	2,565.0	61.4	20.0	20.0	20.0	36.0	J-167	B
J-179	2,587.2	2,591.2	65.8	20.0	20.0	20.0	32.8	J-178	B
J-220	2,638.0	2,638.0	103.1	20.0	25.6	20.0	20.0	J-221	C-Trans
J-87	2,647.0	2,649.5	74.1	20.0	20.0	20.0	41.4	J-58	C
J-219	2,656.3	2,656.3	103.1	20.0	25.6	20.0	20.0	J-221	C-Trans
J-218	2,663.6	2,663.6	103.1	20.0	25.6	20.0	20.0	J-221	C-Trans
J-216	2,663.6	2,663.6	103.1	20.0	23.7	20.0	20.0	J-221	C-Trans
Brookwood Well 3	2,663.6	2,663.6	101.2	20.0	21.2	20.0	20.0	J-221	C-Trans

Scenario: 2006 Max Day
Fire Flow Analysis
Fire Flow Report

Label	Available Fire Flow (gpm)	Total Flow Available (gpm)	Pressure (psi)	Residual Pressure (psi)	Calculated Residual Pressure (psi)	Minimum Zone Pressure (psi)	Calculated Minimum Zone Pressure (psi)	Minimum Zone Junction	Zone
J-209	2,663.7	2,665.7	81.3	20.0	22.6	20.0	20.0	J-213	B
J-215	2,684.6	2,684.6	103.1	20.0	25.6	20.0	20.0	J-221	C-Trans
J-121	2,690.1	2,694.1	76.5	20.0	20.0	20.0	22.5	J-120	C
J-56	2,691.1	2,695.6	64.3	20.0	20.0	20.0	31.4	J-58	C
J-208	2,691.4	2,691.4	81.3	20.0	22.6	20.0	20.0	J-213	B
J-120	2,709.7	2,714.2	76.5	20.0	20.0	20.0	21.6	J-121	C
J-110	2,720.0	2,724.5	56.0	20.0	20.0	20.0	40.4	J-109	C
UWI Emergency Int	2,729.6	2,729.6	86.3	20.0	20.0	20.0	20.0	UWI Emerge	UWI
J-70	2,765.3	2,766.8	75.0	20.0	20.9	20.0	20.0	J-71	C
J-187	2,772.1	2,772.1	86.3	20.0	20.0	20.0	27.2	J-168	C-Trans
J-171	2,775.9	2,778.9	67.5	20.0	20.0	20.0	34.9	J-170	B
J-41	2,795.3	2,797.8	73.5	20.0	21.7	20.0	20.0	J-42	C
J-35	2,798.1	2,800.1	71.3	20.0	20.0	20.0	42.0	J-58	C
J-150	2,836.2	2,838.2	58.8	20.0	20.0	20.0	21.8	J-151	B
J-151	2,842.7	2,843.7	58.8	20.0	20.0	20.0	20.4	J-152	B
J-152	2,844.9	2,848.9	58.8	20.0	20.0	20.0	20.3	J-151	B
J-40	2,869.8	2,872.8	73.9	20.0	22.2	20.0	20.0	J-42	C
J-178	2,930.7	2,935.2	65.8	20.0	20.0	20.0	20.0	J-179	B
J-167	2,953.3	2,955.3	61.4	20.0	20.0	20.0	23.4	J-166	B
J-153	2,961.3	2,965.3	60.6	20.0	20.0	20.0	22.3	J-152	B
J-168	2,976.6	2,976.6	82.0	20.0	20.0	20.0	24.3	J-187	C-Trans
J-122	2,996.1	3,000.6	76.5	20.0	20.0	20.0	30.4	J-121	C
J-177	3,003.6	3,005.1	65.8	20.0	20.0	20.0	20.0	J-179	B
J-68	3,004.2	3,006.2	72.9	20.0	20.0	20.0	35.9	J-58	C
J-140	3,022.6	3,027.6	79.6	20.0	20.0	20.0	37.7	J-110	C
J-156	3,035.0	3,039.0	58.8	20.0	20.0	20.0	24.9	J-157	B
J-190	3,047.5	3,051.5	71.4	20.0	20.0	20.0	22.6	J-189	B
J-164	3,053.6	3,055.6	61.4	20.0	20.0	20.0	20.0	J-166	B
J-165	3,054.6	3,058.6	60.6	20.0	20.0	20.0	24.1	J-166	B
J-57	3,059.2	3,061.7	58.2	20.0	22.6	20.0	20.0	J-58	C
J-157	3,079.8	3,082.8	60.1	20.0	20.0	20.0	20.6	J-158	B
J-60	3,083.1	3,087.1	58.2	20.0	22.0	20.0	20.0	J-58	C
J-158	3,084.6	3,088.1	60.1	20.0	20.0	20.0	20.4	J-157	B
J-189	3,113.6	3,116.6	70.1	20.0	20.0	20.0	21.3	J-190	B
J-154	3,135.2	3,138.7	60.1	20.0	20.0	20.0	20.9	J-155	B
J-79	3,146.8	3,151.3	79.8	20.0	20.0	20.0	24.8	J-80	C
J-163	3,149.6	3,155.6	63.2	20.0	20.0	20.0	22.4	J-166	B
J-155	3,153.3	3,156.3	60.1	20.0	20.0	20.0	20.2	J-154	B
J-173	3,160.8	3,165.3	64.5	20.0	20.0	20.0	24.9	J-174	B
J-207	3,166.9	3,168.9	81.3	20.0	22.6	20.0	20.0	J-213	B
J-80	3,175.0	3,179.0	79.8	20.0	20.0	20.0	23.9	J-79	C
J-159	3,178.1	3,180.1	58.8	20.0	20.0	20.0	24.1	J-158	B
J-174	3,209.1	3,211.6	64.5	20.0	20.0	20.0	23.1	J-173	B
J-170	3,222.7	3,228.2	65.8	20.0	20.0	20.0	21.7	J-171	B
Lexington Well 2	3,238.7	3,238.7	76.1	20.0	20.0	20.0	23.2	J-130	C
Lexington Well 1	3,248.7	3,248.7	82.0	20.0	20.0	20.0	20.8	J-147	C
J-147	3,274.7	3,278.2	82.0	20.0	20.0	20.0	20.0	Lexington W	C
J-206	3,287.3	3,291.3	74.4	20.0	20.0	20.0	25.6	J-160	B
J-146	3,303.0	3,306.0	82.0	20.0	20.0	20.0	20.0	J-147	C
J-222	3,329.2	3,329.7	82.0	20.0	20.0	20.0	20.0	J-168	C-Trans

Scenario: 2006 Max Day
Fire Flow Analysis
Fire Flow Report

Label	Available Fire Flow (gpm)	Total Flow Available (gpm)	Pressure (psi)	Residual Pressure (psi)	Calculated Residual Pressure (psi)	Minimum Zone Pressure (psi)	Calculated Minimum Zone Pressure (psi)	Minimum Zone Junction	Zone
J-130	3,336.8	3,341.8	76.5	20.0	20.4	20.0	20.0	Lexington W	C
J-78	3,342.1	3,345.1	78.1	20.0	20.0	20.0	21.8	J-79	C
J-185	3,355.7	3,359.7	64.5	20.0	20.0	20.0	24.6	J-176	B
J-145	3,373.0	3,373.5	82.0	20.0	20.3	20.0	20.0	J-149	C
J-144	3,373.0	3,381.0	80.8	20.0	21.3	20.0	20.0	J-149	C
J-55	3,374.8	3,377.8	61.2	20.0	22.5	20.0	20.0	J-58	C
J-172	3,385.0	3,390.0	61.9	20.0	20.0	20.0	22.7	J-160	B
J-134	3,405.6	3,407.6	57.5	20.0	20.0	20.0	21.1	J-224	B
J-162	3,411.6	3,416.6	63.2	20.0	20.0	20.0	21.7	J-134	B
J-205	3,413.4	3,417.9	78.7	20.0	20.0	20.0	22.1	J-160	B
J-54	3,413.8	3,416.3	61.7	20.0	22.7	20.0	20.0	J-58	C
J-224	3,415.9	3,417.4	58.4	20.0	20.3	20.0	20.0	J-134	B
J-61	3,417.4	3,420.9	65.1	20.0	24.1	20.0	20.0	J-58	C
J-175	3,430.3	3,434.3	63.2	20.0	20.0	20.0	21.2	J-176	B
J-160	3,445.9	3,445.9	60.1	20.0	20.0	20.0	20.9	J-234	B
J-169	3,448.1	3,461.6	60.1	20.0	20.4	20.0	20.0	J-134	B
J-176	3,448.3	3,448.3	63.2	20.0	20.0	20.0	20.5	J-175	B
J-234	3,455.6	3,467.6	60.1	20.0	20.0	20.0	20.4	J-134	B
J-180	3,458.5	3,458.5	64.5	20.0	21.2	20.0	20.0	J-176	B
J-161	3,459.5	3,463.0	61.4	20.0	20.4	20.0	20.0	J-160	B
J-231	3,469.4	3,478.9	71.8	20.0	27.4	20.0	20.0	J-160	B
J-204	3,477.0	3,479.5	74.4	20.0	28.0	20.0	20.0	J-160	B
J-203	3,477.3	3,480.8	74.4	20.0	28.0	20.0	20.0	J-160	B
J-202	3,480.2	3,481.7	77.0	20.0	30.3	20.0	20.0	J-160	B
J-186	3,481.4	3,483.4	64.5	20.0	20.9	20.0	20.0	J-176	B
J-201	3,482.1	3,483.1	78.7	20.0	32.0	20.0	20.0	J-160	B
J-200	3,482.5	3,486.0	78.7	20.0	32.0	20.0	20.0	J-160	B
J-199	3,486.1	3,487.6	80.0	20.0	33.3	20.0	20.0	J-160	B
J-198	3,486.7	3,489.2	80.0	20.0	33.3	20.0	20.0	J-160	B
J-197	3,491.8	3,494.8	80.5	20.0	33.8	20.0	20.0	J-160	B
J-196	3,492.6	3,493.1	80.5	20.0	33.9	20.0	20.0	J-160	B
J-117	3,493.5	3,499.0	68.0	20.0	20.0	20.0	27.1	J-114	C
J-195	3,494.2	3,494.2	81.3	20.0	34.8	20.0	20.0	J-160	B
J-193	3,501.3	3,506.3	78.3	20.0	32.2	20.0	20.0	J-160	B
J-181	3,507.4	3,508.9	66.6	20.0	22.6	20.0	20.0	J-176	B
J-192	3,513.0	3,524.0	70.1	20.0	25.0	20.0	20.0	J-160	B
J-191	3,517.9	3,519.4	68.8	20.0	24.1	20.0	20.0	J-160	B
J-188	3,520.0	3,520.0	68.8	20.0	24.3	20.0	20.0	J-160	B
J-182	3,524.1	3,525.1	67.5	20.0	23.5	20.0	20.0	J-176	B
J-183	3,532.4	3,536.9	65.8	20.0	21.6	20.0	20.0	J-176	B
J-133	3,535.4	3,538.4	76.5	20.0	20.0	20.0	24.9	J-132	C
J-184	3,541.2	3,541.2	65.3	20.0	20.8	20.0	20.0	J-176	B
J-44	3,558.5	3,561.0	71.2	20.0	22.6	20.0	20.0	J-45	C
J-77	3,615.7	3,615.7	78.1	20.0	20.0	20.0	21.8	J-76	C
J-125	3,676.5	3,680.0	76.1	20.0	22.2	20.0	20.0	J-128	C
J-75	3,685.5	3,688.0	77.6	20.0	22.2	20.0	20.0	J-76	C
J-124	3,691.5	3,692.5	75.2	20.0	21.1	20.0	20.0	J-128	C
J-132	3,713.6	3,714.6	76.9	20.0	20.4	20.0	20.0	J-133	C
J-74	3,725.0	3,726.0	76.8	20.0	21.3	20.0	20.0	J-76	C
J-129	3,725.7	3,728.7	76.5	20.0	20.4	20.0	20.0	Lexington W	C

Scenario: 2006 Max Day
Fire Flow Analysis
Fire Flow Report

Label	Available Fire Flow (gpm)	Total Flow Available (gpm)	Pressure (psi)	Residual Pressure (psi)	Calculated Residual Pressure (psi)	Minimum Zone Pressure (psi)	Calculated Minimum Zone Pressure (psi)	Minimum Zone Junction	Zone
J-135	3,732.6	3,737.1	77.8	20.0	20.0	20.0	22.2	J-133	C
J-123	3,745.1	3,749.1	75.2	20.0	20.5	20.0	20.0	J-128	C
J-136	3,786.7	3,787.7	79.5	20.0	20.1	20.0	20.0	J-135	C
J-137	3,792.9	3,794.4	79.5	20.0	20.0	20.0	20.1	J-135	C
J-138	3,821.2	3,824.2	80.8	20.0	21.3	20.0	20.0	J-149	C
J-114	3,833.5	3,837.5	66.7	20.0	20.0	20.0	21.5	J-117	C
J-119	3,843.2	3,845.7	76.6	20.0	20.7	20.0	20.0	J-128	C
J-118	3,865.2	3,867.2	76.6	20.0	20.5	20.0	20.0	J-128	C
J-73	3,869.6	3,869.6	76.8	20.0	21.3	20.0	20.0	J-76	C
J-113	3,885.9	3,887.9	64.2	20.0	20.0	20.0	22.5	J-112	C
J-115	3,897.1	3,905.1	74.0	20.0	21.9	20.0	20.0	J-114	C
J-53	3,901.0	3,903.5	64.3	20.0	26.9	20.0	20.0	J-58	C
J-62	3,916.0	3,920.0	66.8	20.0	28.2	20.0	20.0	J-58	C
J-116	3,925.2	3,932.7	75.3	20.0	22.6	20.0	20.0	J-117	C
J-72	3,925.9	3,926.4	76.8	20.0	21.3	20.0	20.0	J-76	C
J-109	3,951.2	3,952.2	59.9	20.0	23.9	20.0	20.0	J-110	C
J-112	3,966.3	3,968.8	62.0	20.0	20.0	20.0	20.6	J-111	C
J-139	3,972.4	3,976.4	79.6	20.0	20.0	20.0	22.0	J-140	C
J-69	3,990.1	3,990.6	76.8	20.0	22.6	20.0	20.0	J-71	C
J-111	3,993.5	3,995.0	62.0	20.0	20.0	20.0	20.0	J-112	C
J-39	4,000.9	4,001.9	74.3	20.0	22.6	20.0	20.0	J-42	C
J-48	4,016.5	4,019.5	65.6	20.0	29.1	20.0	20.0	J-58	C
J-47	4,031.1	4,033.1	66.4	20.0	28.8	20.0	20.0	J-58	C
J-46	4,038.0	4,040.0	68.1	20.0	31.1	20.0	20.0	J-58	C
J-141	4,056.5	4,062.0	77.9	20.0	20.0	20.0	21.7	J-143	C
J-142	4,112.2	4,113.2	77.9	20.0	20.0	20.0	20.6	J-141	C
J-63	4,120.5	4,121.5	69.9	20.0	31.6	20.0	20.0	J-58	C
J-99	4,145.1	4,148.1	72.0	20.0	20.0	20.0	26.1	J-97	C
J-32	4,161.8	4,164.8	67.1	20.0	20.0	20.0	33.8	J-24	C
J-64	4,183.7	4,185.2	70.7	20.0	31.5	20.0	20.0	J-58	C
J-49	4,207.1	4,209.6	68.2	20.0	29.5	20.0	20.0	J-58	C
J-97	4,230.5	4,235.5	74.2	20.0	20.0	20.0	22.2	J-99	C
J-108	4,262.1	4,263.6	59.5	20.0	23.4	20.0	20.0	J-110	C
J-92	4,280.7	4,281.7	79.7	20.0	20.7	20.0	20.0	J-142	C
J-65	4,298.1	4,299.1	72.4	20.0	31.7	20.0	20.0	J-58	C
J-66	4,298.4	4,298.9	74.2	20.0	26.1	20.0	20.0	J-58	C
J-67	4,298.4	4,299.4	74.2	20.0	24.9	20.0	20.0	J-58	C
J-90	4,304.1	4,307.6	79.7	20.0	21.7	20.0	20.0	J-91	C
J-96	4,315.4	4,318.9	73.3	20.0	20.0	20.0	24.4	J-97	C
J-50	4,356.3	4,358.8	69.5	20.0	29.3	20.0	20.0	J-58	C
J-38	4,359.4	4,359.9	74.3	20.0	22.6	20.0	20.0	J-42	C
J-81	4,428.0	4,428.5	72.0	20.0	29.8	20.0	20.0	J-58	C
J-82	4,464.9	4,465.9	72.9	20.0	30.2	20.0	20.0	J-58	C
J-52	4,502.1	4,504.1	71.3	20.0	29.9	20.0	20.0	J-58	C
J-100	4,542.7	4,544.7	67.3	20.0	20.0	20.0	22.6	J-110	C
J-89	4,548.0	4,551.5	79.7	20.0	20.8	20.0	20.0	J-91	C
J-104	4,591.1	4,593.1	61.3	20.0	25.2	20.0	20.0	J-110	C
J-85	4,600.4	4,602.4	72.4	20.0	28.5	20.0	20.0	J-58	C
J-37	4,608.0	4,610.5	71.3	20.0	29.1	20.0	20.0	J-58	C
J-86	4,651.1	4,652.6	74.6	20.0	25.6	20.0	20.0	J-58	C

Scenario: 2006 Max Day
Fire Flow Analysis
Fire Flow Report

Label	Available Fire Flow (gpm)	Total Flow Available (gpm)	Pressure (psi)	Residual Pressure (psi)	Calculated Residual Pressure (psi)	Minimum Zone Pressure (psi)	Calculated Minimum Zone Pressure (psi)	Minimum Zone Junction	Zone
J-88	4,665.0	4,668.5	75.4	20.0	25.0	20.0	20.0	J-58	C
J-103	4,685.7	4,689.2	64.3	20.0	21.5	20.0	20.0	J-110	C
J-102	4,695.1	4,698.1	65.1	20.0	21.6	20.0	20.0	J-110	C
J-94	4,734.8	4,737.8	69.9	20.0	23.0	20.0	20.0	J-95	C
J-36	4,742.3	4,742.3	71.3	20.0	28.3	20.0	20.0	J-58	C
J-101	4,745.3	4,746.3	67.3	20.0	21.0	20.0	20.0	J-110	C
J-5	4,749.5	4,752.5	50.3	20.0	20.0	20.0	22.5	J-6	C
J-93	4,758.9	4,761.4	71.6	20.0	24.1	20.0	20.0	J-58	C
J-105	4,817.2	4,819.2	57.8	20.0	21.3	20.0	20.0	J-110	C
J-106	4,833.4	4,835.4	57.4	20.0	20.8	20.0	20.0	J-110	C
J-107	4,856.4	4,859.4	54.4	20.0	20.0	20.0	22.4	J-110	C
J-6	4,865.3	4,875.3	51.6	20.0	20.2	20.0	20.0	J-5	C
J-25	5,000.0	5,003.5	65.8	20.0	21.8	20.0	21.9	J-24	C
J-24	5,000.0	5,004.0	65.3	20.0	21.5	20.0	22.3	J-25	C
J-18	5,000.0	5,004.0	61.5	20.0	23.1	20.0	20.9	J-20	C
J-26	5,000.0	5,004.0	67.9	20.0	24.8	20.0	23.2	J-28	C
J-21	5,000.0	5,002.5	62.8	20.0	23.0	20.0	22.3	J-20	C
J-19	5,000.0	5,002.5	61.5	20.0	22.7	20.0	20.2	J-20	C
J-23	5,000.0	5,003.0	65.8	20.0	26.5	20.0	27.4	J-31	C
J-17	5,000.0	5,004.0	64.6	20.0	34.5	20.0	29.5	J-20	C
J-16	5,000.0	5,001.5	64.6	20.0	35.6	20.0	30.3	J-20	C
J-29	5,000.0	5,000.0	69.6	20.0	28.9	20.0	23.3	J-58	C
J-30	5,000.0	5,002.5	68.8	20.0	27.0	20.0	23.9	J-58	C
J-31	5,000.0	5,004.0	65.8	20.0	24.4	20.0	27.9	J-23	C
J-15	5,000.0	5,003.0	57.3	20.0	42.4	20.0	37.2	J-14	C
J-27	5,000.0	5,003.0	68.4	20.0	25.4	20.0	22.8	J-28	C
J-13	5,000.0	5,004.5	53.8	20.0	20.0	20.0	28.7	J-14	C
J-12	5,000.0	5,004.5	56.0	20.0	37.3	20.0	33.7	J-14	C
J-3	5,000.0	5,002.5	50.4	20.0	37.3	20.0	37.0	J-4	C
J-14	5,000.0	5,003.0	50.8	20.0	20.0	20.0	31.6	J-13	C
J-9	5,000.0	5,002.0	51.7	20.0	33.7	20.0	34.1	J-8	C
J-10	5,000.0	5,001.0	52.1	20.0	30.5	20.0	30.2	J-14	C
J-11	5,000.0	5,003.0	52.5	20.0	29.6	20.0	32.1	J-14	C
J-7	5,000.0	5,004.0	51.6	20.0	26.7	20.0	30.2	J-107	C
J-34	5,000.0	5,001.5	70.0	20.0	26.3	20.0	20.5	J-58	C
J-22	5,000.0	5,004.5	62.8	20.0	22.9	20.0	22.6	J-20	C
J-8	5,000.0	5,002.5	51.6	20.0	30.6	20.0	32.5	J-7	C
J-2	5,000.0	5,000.0	49.1	20.0	37.6	20.0	38.6	J-4	C
J-1	5,000.0	5,000.0	56.5	20.0	48.4	20.0	41.0	J-2	C
J-4	5,000.0	5,005.0	50.0	20.0	24.8	20.0	30.7	J-5	C

EAST HILLS RESER
FULL CAPACITY
- BROOKWOOD WELL ON

Scenario: 2006 Max Day
Fire Flow Analysis
Fire Flow Report

Label	Available Fire Flow (gpm)	Total Flow Available (gpm)	Pressure (psi)	Residual Pressure (psi)	Calculated Residual Pressure (psi)	Minimum Zone Pressure (psi)	Calculated Minimum Zone Pressure (psi)	Minimum Zone Junction	Zone
J-20	1,698.6	1,703.1	59.3	20.0	20.0	20.0	48.6	J-2	C
FH-238	1,831.3	1,831.3	70.1	20.0	20.0	20.0	32.1	J-238	B
J-33	1,837.6	1,843.1	69.3	20.0	20.0	20.0	48.5	J-2	C
J-28	1,944.0	1,948.0	66.2	20.0	20.0	20.0	48.4	J-2	C
J-84	2,008.3	2,011.3	69.9	20.0	20.0	20.0	34.9	J-83	C
FH-237	2,011.9	2,011.9	72.7	20.0	20.0	20.0	32.6	J-237	B
J-98	2,018.1	2,022.1	77.7	20.0	20.0	20.0	48.2	J-2	C
FH-242	2,034.4	2,034.4	65.8	20.0	20.0	20.0	31.5	J-229	B
J-91	2,052.1	2,056.1	79.3	20.0	20.0	20.0	48.2	J-2	C
J-238	2,130.7	2,133.7	70.1	20.0	20.0	20.0	20.0	FH-238	B
J-233	2,148.9	2,151.4	64.9	20.0	20.0	20.0	39.3	J-229	B
J-42	2,162.5	2,164.5	72.3	20.0	20.0	20.0	44.6	J-41	C
J-128	2,200.8	2,204.3	75.5	20.0	20.0	20.0	35.2	J-127	C
FH-239	2,243.1	2,243.1	70.1	20.0	20.0	20.0	31.9	J-229	B
J-213	2,284.3	2,288.8	78.7	20.0	20.0	20.0	35.1	J-212	B
J-76	2,287.6	2,291.1	76.3	20.0	20.0	20.0	47.9	J-2	C
J-59	2,300.3	2,305.3	62.0	20.0	20.0	20.0	26.1	J-58	C
J-237	2,337.2	2,338.7	72.7	20.0	20.0	20.0	20.0	FH-237	B
J-143	2,345.0	2,350.5	81.2	20.0	20.0	20.0	47.9	J-2	C
J-71	2,356.4	2,358.4	75.0	20.0	20.0	20.0	40.5	J-70	C
J-229	2,359.5	2,359.5	64.5	20.0	20.0	20.0	22.6	J-242	B
J-43	2,368.0	2,370.0	72.0	20.0	20.0	20.0	46.4	J-58	C
J-242	2,397.3	2,399.3	65.8	20.0	21.3	20.0	20.0	J-229	B
J-83	2,400.3	2,402.8	70.7	20.0	20.9	20.0	20.0	J-84	C
J-236	2,447.4	2,448.9	72.7	20.0	22.6	20.0	20.0	J-238	B
J-241	2,462.0	2,464.0	70.1	20.0	25.6	20.0	20.0	J-229	B
J-45	2,491.8	2,493.8	69.4	20.0	20.0	20.0	45.4	J-58	C
J-58	2,539.1	2,542.6	56.4	20.0	20.0	20.0	25.6	J-59	C
J-214	2,541.4	2,546.4	81.3	20.0	20.0	20.0	31.9	J-213	B
J-240	2,559.5	2,561.5	70.1	20.0	25.6	20.0	20.0	J-229	B
J-212	2,604.5	2,608.0	81.3	20.0	22.6	20.0	20.0	J-213	B
J-127	2,610.6	2,615.1	75.5	20.0	20.0	20.0	20.0	J-128	C
J-211	2,655.2	2,658.2	81.3	20.0	22.6	20.0	20.0	J-213	B
J-239	2,661.7	2,664.7	70.1	20.0	25.6	20.0	20.0	J-229	B
J-51	2,696.6	2,699.6	70.6	20.0	20.0	20.0	45.4	J-58	C
J-95	2,717.7	2,721.2	67.7	20.0	20.0	20.0	47.3	J-5	C
J-235	2,730.8	2,731.3	71.4	20.0	26.9	20.0	20.0	J-229	B
J-210	2,856.4	2,859.9	81.3	20.0	22.6	20.0	20.0	J-213	B
J-87	2,892.7	2,895.2	75.1	20.0	20.0	20.0	46.2	J-58	C
J-126	2,902.4	2,905.9	75.5	20.0	20.0	20.0	20.0	J-128	C
J-56	2,913.9	2,918.4	65.0	20.0	20.0	20.0	34.6	J-58	C
J-232	2,921.6	2,930.1	70.1	20.0	25.6	20.0	20.0	J-229	B
J-35	2,934.2	2,936.2	71.9	20.0	20.0	20.0	46.8	J-58	C
J-41	2,950.6	2,953.1	74.1	20.0	21.7	20.0	20.0	J-42	C
J-70	2,986.3	2,987.8	75.9	20.0	20.9	20.0	20.0	J-71	C
J-40	3,033.3	3,036.3	74.5	20.0	22.2	20.0	20.0	J-42	C
J-166	3,052.7	3,056.7	61.4	20.0	20.0	20.0	42.2	J-167	B
J-149	3,074.1	3,083.1	82.3	20.0	20.0	20.0	46.7	J-5	C
J-121	3,082.6	3,086.6	78.0	20.0	20.0	20.0	23.2	J-120	C
J-120	3,108.7	3,113.2	78.0	20.0	20.0	20.0	22.1	J-121	C

Scenario: 2006 Max Day
Fire Flow Analysis
Fire Flow Report

Label	Available Fire Flow (gpm)	Total Flow Available (gpm)	Pressure (psi)	Residual Pressure (psi)	Calculated Residual Pressure (psi)	Minimum Zone Pressure (psi)	Calculated Minimum Zone Pressure (psi)	Minimum Zone Junction	Zone
J-110	3,113.0	3,117.5	56.9	20.0	20.0	20.0	45.1	J-109	C
J-179	3,119.8	3,123.8	65.8	20.0	20.0	20.0	38.0	J-178	B
J-209	3,120.4	3,122.4	81.3	20.0	22.6	20.0	20.0	J-213	B
J-208	3,167.8	3,167.8	81.3	20.0	22.6	20.0	20.0	J-213	B
J-68	3,274.2	3,276.2	73.7	20.0	20.0	20.0	40.6	J-58	C
J-171	3,391.3	3,394.3	67.5	20.0	20.0	20.0	42.3	J-170	B
J-79	3,407.6	3,412.1	80.6	20.0	20.0	20.0	25.6	J-80	C
J-57	3,434.0	3,436.5	59.0	20.0	22.6	20.0	20.0	J-58	C
J-80	3,440.4	3,444.4	80.6	20.0	20.0	20.0	24.5	J-79	C
J-60	3,464.3	3,468.3	59.0	20.0	21.9	20.0	20.0	J-58	C
J-150	3,482.4	3,484.4	58.8	20.0	20.0	20.0	22.7	J-151	B
J-151	3,496.9	3,497.9	58.8	20.0	20.0	20.0	20.7	J-152	B
J-152	3,501.3	3,505.3	58.8	20.0	20.0	20.0	20.5	J-151	B
J-122	3,518.5	3,523.0	78.0	20.0	20.0	20.0	33.7	J-121	C
J-140	3,550.5	3,555.5	81.3	20.0	20.0	20.0	43.7	J-110	C
J-221	3,551.7	3,551.7	104.7	20.0	20.0	20.0	47.2	J-187	C-Trans
J-78	3,646.4	3,649.4	78.9	20.0	20.0	20.0	21.7	J-79	C
J-153	3,680.3	3,684.3	60.6	20.0	20.0	20.0	24.0	J-152	B
J-178	3,695.5	3,700.0	65.8	20.0	20.0	20.0	20.0	J-179	B
J-167	3,703.2	3,705.2	61.4	20.0	20.0	20.0	25.2	J-166	B
J-177	3,822.0	3,823.5	65.8	20.0	20.0	20.0	20.0	J-179	B
J-190	3,822.5	3,826.5	71.4	20.0	20.0	20.0	24.6	J-189	B
J-55	3,839.5	3,842.5	62.0	20.0	21.5	20.0	20.0	J-58	C
J-164	3,874.9	3,876.9	61.4	20.0	20.0	20.0	20.0	J-166	B
J-156	3,877.9	3,881.9	58.8	20.0	20.0	20.0	27.2	J-157	B
J-165	3,881.9	3,885.9	60.6	20.0	20.0	20.0	26.2	J-166	B
J-54	3,888.7	3,891.2	62.4	20.0	21.8	20.0	20.0	J-58	C
J-61	3,891.3	3,894.8	65.9	20.0	22.7	20.0	20.0	J-58	C
J-207	3,906.9	3,908.9	81.3	20.0	22.6	20.0	20.0	J-213	B
J-44	3,934.2	3,936.7	72.0	20.0	22.6	20.0	20.0	J-45	C
J-157	3,938.5	3,941.5	60.1	20.0	20.0	20.0	21.0	J-158	B
J-158	3,947.8	3,951.3	60.1	20.0	20.0	20.0	20.7	J-157	B
J-189	3,956.5	3,959.5	70.1	20.0	20.0	20.0	21.3	J-190	B
Lexington Well 2	3,963.1	3,963.1	77.7	20.0	20.0	20.0	24.5	J-130	C
J-77	3,976.0	3,976.0	78.9	20.0	20.0	20.0	22.7	J-76	C
J-154	4,015.5	4,019.0	60.1	20.0	20.0	20.0	21.5	J-155	B
J-163	4,027.0	4,033.0	63.2	20.0	20.0	20.0	24.5	J-166	B
J-155	4,050.5	4,053.5	60.1	20.0	20.0	20.0	20.3	J-154	B
J-75	4,081.3	4,083.8	78.5	20.0	22.2	20.0	20.0	J-76	C
J-173	4,109.5	4,114.0	64.5	20.0	20.0	20.0	28.0	J-174	B
J-130	4,119.1	4,124.1	78.1	20.0	20.4	20.0	20.0	Lexington W	C
J-74	4,130.5	4,131.5	77.6	20.0	21.3	20.0	20.0	J-76	C
J-159	4,154.2	4,156.2	58.8	20.0	20.0	20.0	25.8	J-158	B
J-206	4,158.5	4,162.5	74.4	20.0	20.0	20.0	35.9	J-160	B
J-170	4,178.6	4,184.1	65.8	20.0	20.0	20.0	21.7	J-171	B
J-117	4,191.3	4,196.8	69.2	20.0	20.0	20.0	30.3	J-114	C
J-174	4,201.6	4,204.1	64.5	20.0	20.0	20.0	25.0	J-173	B
UWI Emergency Int	4,256.2	4,256.2	91.3	20.0	20.0	20.0	20.0	UWI Emerge	UWI
J-73	4,311.4	4,311.4	77.6	20.0	21.3	20.0	20.0	J-76	C
J-205	4,315.9	4,320.4	78.7	20.0	20.0	20.0	32.7	J-160	B

Scenario: 2006 Max Day
Fire Flow Analysis
Fire Flow Report

Label	Available Fire Flow (gpm)	Total Flow Available (gpm)	Pressure (psi)	Residual Pressure (psi)	Calculated Residual Pressure (psi)	Minimum Zone Pressure (psi)	Calculated Minimum Zone Pressure (psi)	Minimum Zone Junction	Zone
J-39	4,322.2	4,323.2	74.9	20.0	22.6	20.0	20.0	J-42	C
J-220	4,345.4	4,345.4	110.3	20.0	25.6	20.0	20.0	J-221	C-Trans
J-72	4,382.5	4,383.0	77.6	20.0	21.3	20.0	20.0	J-76	C
J-187	4,389.2	4,389.2	91.3	20.0	20.0	20.0	27.2	J-168	C-Trans
J-219	4,413.1	4,413.1	110.3	20.0	25.6	20.0	20.0	J-221	C-Trans
J-32	4,431.0	4,434.0	67.5	20.0	20.0	20.0	35.7	J-24	C
J-218	4,440.3	4,440.3	110.3	20.0	25.6	20.0	20.0	J-221	C-Trans
J-216	4,465.5	4,465.5	110.6	20.0	23.7	20.0	20.0	J-221	C-Trans
J-215	4,471.1	4,471.1	110.2	20.0	25.1	20.0	20.0	J-221	C-Trans
Brookwood Well 3	4,472.5	4,472.5	108.7	20.0	21.2	20.0	20.0	J-221	C-Trans
J-69	4,476.8	4,477.3	77.6	20.0	22.6	20.0	20.0	J-71	C
J-133	4,496.8	4,499.8	78.2	20.0	20.0	20.0	27.5	J-132	C
J-168	4,521.2	4,521.2	86.0	20.0	20.0	20.0	28.2	J-187	C-Trans
J-53	4,534.3	4,536.8	65.0	20.0	26.0	20.0	20.0	J-58	C
J-185	4,538.2	4,542.2	64.5	20.0	20.0	20.0	28.6	J-176	B
J-162	4,553.1	4,558.1	63.2	20.0	20.0	20.0	23.4	J-163	B
J-62	4,558.1	4,562.1	67.6	20.0	27.5	20.0	20.0	J-58	C
Lexington Well 1	4,576.0	4,576.0	85.0	20.0	20.0	20.0	21.6	J-147	C
J-172	4,606.4	4,611.4	61.9	20.0	20.0	20.0	25.2	J-173	B
J-147	4,636.8	4,640.3	85.0	20.0	20.0	20.0	20.0	Lexington W	C
J-134	4,637.5	4,639.5	57.5	20.0	20.0	20.0	21.4	J-224	B
J-224	4,660.9	4,662.4	58.4	20.0	20.0	20.0	20.0	J-134	B
J-125	4,681.6	4,685.1	77.6	20.0	22.2	20.0	20.0	J-128	C
J-48	4,690.3	4,693.3	66.3	20.0	28.5	20.0	20.0	J-58	C
J-175	4,692.6	4,696.6	63.2	20.0	20.0	20.0	22.4	J-176	B
J-231	4,703.4	4,712.9	71.8	20.0	27.4	20.0	20.0	J-229	B
J-146	4,703.9	4,706.9	85.0	20.0	20.0	20.0	20.0	J-147	C
J-124	4,704.1	4,705.1	76.8	20.0	20.8	20.0	20.0	J-128	C
J-47	4,719.0	4,721.0	67.2	20.0	28.2	20.0	20.0	J-58	C
J-169	4,720.5	4,734.0	60.1	20.0	20.0	20.0	20.4	J-134	B
J-114	4,724.9	4,728.9	67.9	20.0	20.0	20.0	21.9	J-117	C
J-46	4,731.1	4,733.1	68.9	20.0	31.0	20.0	20.0	J-58	C
J-234	4,739.5	4,751.5	60.1	20.0	20.0	20.0	21.3	J-160	B
J-160	4,741.4	4,741.4	60.1	20.0	20.0	20.0	21.2	J-234	B
J-99	4,743.9	4,746.9	72.9	20.0	20.0	20.0	27.2	J-97	C
J-176	4,744.6	4,744.6	63.2	20.0	20.0	20.0	20.7	J-175	B
J-38	4,745.6	4,746.1	74.9	20.0	22.6	20.0	20.0	J-42	C
J-123	4,750.1	4,754.1	76.7	20.0	20.0	20.0	20.8	J-128	C
J-161	4,764.8	4,768.3	61.4	20.0	20.0	20.0	20.2	J-160	B
J-180	4,769.4	4,769.4	64.5	20.0	21.1	20.0	20.0	J-176	B
J-129	4,779.3	4,782.3	78.1	20.0	20.4	20.0	20.0	Lexington W	C
J-113	4,782.7	4,784.7	65.2	20.0	20.0	20.0	23.3	J-112	C
J-132	4,816.3	4,817.3	78.6	20.0	20.4	20.0	20.0	J-133	C
J-204	4,818.1	4,820.6	74.4	20.0	24.1	20.0	20.0	J-229	B
J-203	4,822.1	4,825.6	74.4	20.0	23.9	20.0	20.0	J-229	B
J-186	4,825.4	4,827.4	64.5	20.0	20.8	20.0	20.0	J-176	B
J-115	4,826.3	4,834.3	75.3	20.0	20.7	20.0	20.0	J-114	C
J-97	4,828.9	4,833.9	75.1	20.0	20.0	20.0	22.6	J-98	C
J-119	4,838.6	4,841.1	78.0	20.0	20.0	20.0	20.8	J-118	C
J-222	4,846.8	4,847.3	85.1	20.0	20.0	20.0	23.1	J-168	C-Trans

Scenario: 2006 Max Day
Fire Flow Analysis
Fire Flow Report

Label	Available Fire Flow (gpm)	Total Flow Available (gpm)	Pressure (psi)	Residual Pressure (psi)	Calculated Residual Pressure (psi)	Minimum Zone Pressure (psi)	Calculated Minimum Zone Pressure (psi)	Minimum Zone Junction	Zone
J-118	4,847.7	4,849.7	78.0	20.0	20.0	20.0	20.5	J-119	C
J-202	4,847.9	4,849.4	77.0	20.0	25.6	20.0	20.0	J-229	B
J-63	4,854.3	4,855.3	70.7	20.0	31.4	20.0	20.0	J-58	C
J-201	4,859.6	4,860.6	78.7	20.0	27.1	20.0	20.0	J-229	B
J-144	4,861.4	4,869.4	83.6	20.0	21.3	20.0	20.0	J-149	C
J-200	4,861.8	4,865.3	78.7	20.0	27.0	20.0	20.0	J-160	B
J-199	4,864.8	4,866.3	80.0	20.0	28.5	20.0	20.0	J-160	B
J-198	4,865.4	4,867.9	80.0	20.0	28.5	20.0	20.0	J-160	B
J-197	4,872.6	4,875.6	80.5	20.0	29.5	20.0	20.0	J-160	B
J-116	4,873.4	4,880.9	76.6	20.0	21.8	20.0	20.0	J-117	C
J-196	4,873.9	4,874.4	80.5	20.0	29.6	20.0	20.0	J-160	B
J-195	4,876.6	4,876.6	81.3	20.0	30.7	20.0	20.0	J-160	B
J-112	4,880.4	4,882.9	63.0	20.0	20.0	20.0	20.7	J-111	C
J-145	4,885.1	4,885.6	85.0	20.0	20.3	20.0	20.0	J-149	C
J-181	4,889.8	4,891.3	66.6	20.0	22.1	20.0	20.0	J-176	B
J-193	4,890.5	4,895.5	78.3	20.0	28.8	20.0	20.0	J-160	B
J-109	4,902.4	4,903.4	60.8	20.0	23.9	20.0	20.0	J-110	C
J-111	4,912.1	4,913.6	63.0	20.0	20.0	20.0	20.1	J-112	C
J-192	4,919.5	4,930.5	70.1	20.0	22.8	20.0	20.0	J-160	B
J-191	4,933.0	4,934.5	68.8	20.0	22.4	20.0	20.0	J-160	B
J-182	4,935.6	4,936.6	67.5	20.0	23.1	20.0	20.0	J-176	B
J-135	4,935.6	4,940.1	79.6	20.0	20.0	20.0	22.4	J-133	C
J-188	4,939.2	4,939.2	68.8	20.0	22.8	20.0	20.0	J-160	B
J-49	4,939.7	4,942.2	68.9	20.0	27.4	20.0	20.0	J-58	C
J-64	4,950.3	4,951.8	71.5	20.0	31.3	20.0	20.0	J-58	C
J-96	4,955.4	4,958.9	74.2	20.0	20.0	20.0	25.4	J-97	C
J-183	4,957.9	4,962.4	65.8	20.0	21.4	20.0	20.0	J-176	B
J-184	4,982.9	4,982.9	65.3	20.0	20.6	20.0	20.0	J-176	B
J-65	5,000.0	5,001.0	73.3	20.0	33.5	20.0	21.7	J-58	C
J-17	5,000.0	5,004.0	64.9	20.0	39.8	20.0	35.0	J-20	C
J-16	5,000.0	5,001.5	64.9	20.0	40.9	20.0	35.7	J-20	C
J-86	5,000.0	5,001.5	75.6	20.0	36.0	20.0	28.1	J-58	C
J-21	5,000.0	5,002.5	63.2	20.0	28.7	20.0	27.9	J-20	C
J-19	5,000.0	5,002.5	61.9	20.0	28.3	20.0	25.8	J-20	C
J-18	5,000.0	5,004.0	61.9	20.0	28.7	20.0	26.5	J-20	C
J-81	5,000.0	5,000.5	72.9	20.0	34.6	20.0	24.2	J-58	C
J-67	5,000.0	5,001.0	75.0	20.0	23.9	20.0	21.7	J-58	C
J-66	5,000.0	5,000.5	75.0	20.0	25.5	20.0	21.7	J-58	C
J-85	5,000.0	5,002.0	73.4	20.0	37.3	20.0	27.2	J-58	C
J-37	5,000.0	5,002.5	71.9	20.0	31.5	20.0	25.4	J-58	C
J-82	5,000.0	5,001.0	73.8	20.0	35.9	20.0	24.9	J-58	C
J-6	5,000.0	5,010.0	52.0	20.0	24.0	20.0	23.8	J-5	C
J-5	5,000.0	5,003.0	50.7	20.0	22.4	20.0	25.2	J-6	C
J-8	5,000.0	5,002.5	52.0	20.0	35.9	20.0	38.8	J-7	C
J-7	5,000.0	5,004.0	52.0	20.0	33.8	20.0	36.2	J-5	C
J-2	5,000.0	5,000.0	49.4	20.0	40.8	20.0	42.0	J-4	C
J-1	5,000.0	5,000.0	56.7	20.0	50.8	20.0	43.5	J-2	C
J-4	5,000.0	5,005.0	50.2	20.0	28.9	20.0	35.4	J-5	C
J-3	5,000.0	5,002.5	50.7	20.0	40.8	20.0	40.6	J-4	C
J-9	5,000.0	5,002.0	52.0	20.0	38.3	20.0	39.0	J-8	C

Scenario: 2006 Max Day
Fire Flow Analysis
Fire Flow Report

Label	Available Fire Flow (gpm)	Total Flow Available (gpm)	Pressure (psi)	Residual Pressure (psi)	Calculated Residual Pressure (psi)	Minimum Zone Pressure (psi)	Calculated Minimum Zone Pressure (psi)	Minimum Zone Junction	Zone
J-14	5,000.0	5,003.0	51.1	20.0	24.1	20.0	35.6	J-13	C
J-13	5,000.0	5,004.5	54.1	20.0	24.0	20.0	32.7	J-14	C
J-15	5,000.0	5,003.0	57.6	20.0	46.1	20.0	41.1	J-14	C
J-52	5,000.0	5,002.0	71.9	20.0	30.8	20.0	23.9	J-58	C
J-11	5,000.0	5,003.0	52.8	20.0	33.6	20.0	36.1	J-14	C
J-10	5,000.0	5,001.0	52.4	20.0	34.6	20.0	34.2	J-14	C
J-50	5,000.0	5,002.5	70.2	20.0	28.3	20.0	21.7	J-58	C
J-12	5,000.0	5,004.5	56.3	20.0	41.3	20.0	37.8	J-14	C
J-26	5,000.0	5,004.0	68.4	20.0	31.5	20.0	30.0	J-28	C
J-27	5,000.0	5,003.0	68.8	20.0	32.1	20.0	29.6	J-28	C
J-136	5,000.0	5,001.0	81.4	20.0	21.5	20.0	21.7	J-135	C
J-25	5,000.0	5,003.5	66.2	20.0	28.1	20.0	28.1	J-24	C
J-108	5,000.0	5,001.5	60.4	20.0	27.1	20.0	24.0	J-110	C
J-107	5,000.0	5,003.0	55.1	20.0	29.3	20.0	33.2	J-106	C
J-29	5,000.0	5,000.0	70.1	20.0	35.9	20.0	32.9	J-58	C
J-30	5,000.0	5,002.5	69.3	20.0	33.9	20.0	33.3	J-58	C
J-24	5,000.0	5,004.0	65.8	20.0	27.7	20.0	28.5	J-25	C
J-142	5,000.0	5,001.0	79.4	20.0	23.8	20.0	25.4	J-141	C
J-23	5,000.0	5,003.0	66.2	20.0	32.2	20.0	33.1	J-31	C
J-22	5,000.0	5,004.5	63.2	20.0	28.7	20.0	28.2	J-20	C
J-138	5,000.0	5,003.0	82.9	20.0	27.3	20.0	27.8	J-149	C
J-137	5,000.0	5,001.5	81.4	20.0	21.8	20.0	22.2	J-136	C
J-141	5,000.0	5,005.5	79.4	20.0	23.1	20.0	24.8	J-143	C
J-139	5,000.0	5,004.0	81.3	20.0	23.4	20.0	25.4	J-140	C
J-92	5,000.0	5,001.0	81.0	20.0	27.5	20.0	28.1	J-91	C
J-34	5,000.0	5,001.5	70.6	20.0	33.9	20.0	30.4	J-58	C
J-94	5,000.0	5,003.0	70.7	20.0	33.2	20.0	30.2	J-95	C
J-93	5,000.0	5,002.5	72.5	20.0	35.0	20.0	29.4	J-58	C
J-88	5,000.0	5,003.5	76.4	20.0	35.9	20.0	28.3	J-58	C
J-36	5,000.0	5,000.0	71.9	20.0	32.6	20.0	27.1	J-58	C
J-90	5,000.0	5,003.5	81.0	20.0	28.6	20.0	26.8	J-91	C
J-89	5,000.0	5,003.5	80.9	20.0	31.8	20.0	30.3	J-58	C
J-104	5,000.0	5,002.0	62.1	20.0	33.2	20.0	28.5	J-110	C
J-103	5,000.0	5,003.5	65.1	20.0	31.0	20.0	30.2	J-110	C
J-106	5,000.0	5,002.0	58.2	20.0	30.9	20.0	30.5	J-107	C
J-105	5,000.0	5,002.0	58.6	20.0	31.2	20.0	30.6	J-107	C
J-100	5,000.0	5,002.0	68.1	20.0	26.2	20.0	31.5	J-110	C
J-31	5,000.0	5,004.0	66.2	20.0	30.2	20.0	33.5	J-23	C
J-102	5,000.0	5,003.0	66.0	20.0	31.2	20.0	30.5	J-110	C
J-101	5,000.0	5,001.0	68.1	20.0	31.3	20.0	31.4	J-100	C

APPENDIX I

Eagle City wells start-up and operation and maintenance procedures

Procedures begin after both systems bacti samples are approved

1. Control programming at each well house has been completed and tested by the Clearwater Operations staff.
2. System connection valve will be opened, and remain open, until regulatory or system maintenance procedures dictate otherwise. This will allow maximum fire flow capacity to both subdivisions and provide redundancy for each well house.
3. All pumps will be placed in 'Auto' mode
    a. Reference programming description provided in this document.
4. The RFP for SCADA control has been submitted for City approval. The SCADA system will be utilized by the Operations staff for control, monitoring, alarm notification, and for scheduling system maintenance activities.
    a. If the SCADA system is not functional at the time the first service is activated, local alarm dialers will be installed at each well house for interim alarm notification until the SCADA programming is complete.
    b. A remote terminal will be located at City Hall for system viewing purposes.
    c. A laptop computer will be provided which allows operator access for control and monitoring purposes.
5. Clearwater Operations will identify the preferred water meter to be utilized by the City of Eagle
    a. Radio read meters will be specified for each installation
    b. Billing and record keeping will be performed by the City of Eagle
    c. COI will provide staff necessary for the installation, reading, and maintenance of the meters
    d. Inventory of meters will be provided by the supplier
6. Upon activation of the first service
    a. The sampling schedule provided in this document will be initiated
    b. Operations staff will follow rules and regulations detailed in IDAPA 58.01.08 and 40 CFR Part 141
    c. Operations staff will perform routine on-site inspection of all facilities
    d. Operations Staff will utilize the SCADA programming to evaluate system performance and enact programming revisions to provide for optimum operating performance
7. Operations staff will institute the operations and management plan outlined in the operations contract.
8. C.O.I. will provide on-going operations and maintenance of all facilities as long as contracted to do so.

Eagle Water System
Eaglefield and Legacy Control scheme

Each well house is programmed to work independently from the other. Static system pressure is set at 55 psi. The control function is as follows.

Pressure drops below 55 psi for 10 seconds: Lead pump 1 on at full speed
Pressure stays below 55 psi for 10 seconds: Lag pump 1 on at full speed
Pressure stays below 55 psi for 10 seconds: Lag pump 2 on at full speed
Pressure drops below 45 psi at any time, all booster pumps to 'off' and fire pump to 'on'

Pressure maintains at 55 psi and lag pump 2 is at 80% or less for 30 seconds: lag pump 2 to 'off'
Pressure maintains at 55 psi and lag pump 1 is at 80% or less for 30 seconds: lag pump 1 to 'off'
Pressure maintains at 55 psi and lead pump is at 80% or less for 30 seconds: lead pump to 'off'

If fire pump is running and drops below 80% at legacy or 60% at Eaglefield for 30 seconds, fire pump will 'stop' and all 3 booster pumps will start at 100%, then begin shut-down sequence above.

The three booster pumps are capable of pumping 450-500 gpm combined at each well house. The fire pumps will pump down to 125-150 gpm before reaching programmed shut-off speeds.

Fire pumps are set to run at 90 psi and the relief valve is set at 95 psi.

A lock is programmed in that will not allow any of the booster pumps to run in 'auto' whenever the fire pump is running.

Minimum positive head on the booster pumps will initially be set at 1 foot.

Legacy						Eaglefield					
Pump 1		Pump 2		pump 3		pump 1		pump 2		pump 3	
psi	pgm	psi	gpm	psi	gpm	psi	gpm	psi	gpm	psi	gpm
50	140	50	213	50	379	50	145	50	142	50	313
52	140	52	215	52	370	52	140	52	138	52	305
54	140	54	213	54	366	54	136	54	132	54	292
56	139	56	210	56	358	56	129	56	127	56	278
58	138	58	207	58	352	58	124	58	120	58	265
60	136	60	203	60	343	60	118	60	114	60	247
62	134	62	200	62	336	62	110	62	106	62	230
64	132	64	197	64	329	64	102	64	98	64	211
66	128	66	195	66	321	66	94	66	88	66	190
68	125	68	193	68	309	68	83	68	75	68	154
70	120	70	187	70	293	70	72	70	59	70	0
72	116	72	182	72	279	72	45	72	0	72	
74	111	74	175	74	265	74	0	74		74	
76	105	76	165	76	247	76		76		76	
78	100	78	154	78	231	78		78		78	
80	95	80	141	80	209	80		80		80	
82	88	82	123	82	184	82		82		82	
84	81	84	107	84	46	84		84		84	
86	73	86	94	86	0	86		86		86	
88	62	88	78	88		88		88		88	
90	47	90	57	90		90		90		90	
92	0	92	0	92		92		92		92	

Legaccy name plate
All heads 173 feet 74.9 jpsi

Eaglefield
1/2 are 110 feet 47.6 psi
3 is 130 feet 56.3 psi

CLEARWATER OPERATIONS, INC.
616 S. WASHINGTON AVENUE
EMMETT, IDAHO 83617
TELEPHONE: 208-365-5385
FAX: 208-365-5389

CITY OF EAGLE WATER SYSTEM
Phase I
PROPOSED SCOPE OF WORK

Phase I is the identification and initiation of administrative programs and documents for support of your well sites and water distribution system. These are the initial regulatory and operating documents essential for providing efficient and defensible strategies for ensuring infrastructure protection, quality water supplies, and emergency response actions. Phase I is an evolving plan that is estimated to take 2 to 3 years to substantially complete and will perpetually require modification. Prioritization of these activities will be based upon the City of Eagle's vision and discussion with regulatory agencies to ensure compliance.

System Establishment

1) Physical review of reservoirs, wells, and pump station
   a) Site Security
   b) Site Inventory
   c) Emergency power
   d) Equipment capabilities
   e) Control schemes
   f) Computer and telemetry systems

Emergency Response Plan Development

1) Emergency action plans
   a) Power outages
   b) Line breaks
   c) Contamination
   d) Equipment failure (pumps, motors, automation, control mechanisms/programming, etc...)
2) Notifications for contaminants

System Mapping

1) Obtain and/or develop accurate map of entire system
   a) Wells
   b) Reservoirs
   c) Hydrants
   d) Dead-ends

CLEARWATER OPERATIONS, INC.
616 S. WASHINGTON AVENUE
EMMETT, IDAHO 83617
TELEPHONE: 208-365-5385
FAX: 208-365-5389

e) Valves
f) Piping
g) Meters
h) Pressure regulators
i) Air relief
j) Back flow preventers

2) Identify areas of concern
   a) Dead ends
   b) Stagnant laterals
   c) Cross connection
3) Keep it current

Water Quality

1) Regulatory Requirements
   a) Sample schedules
   b) Certified lab
   c) Waivers

Primary Documents

1) System.
   a) Systems start-ups
   b) Emergency procedures
2) Regulatory Documents
   a) Sample site plans
   b) Sampling S.O.P.'s
   c) Chain of Custody

3) Manufactures equipment manuals including;
   a) Schematics
   b) Repair parts list
   c) Operating instructions
   d) Maintenance guidelines

CLEARWATER OPERATIONS, INC.
616 S. WASHINGTON AVENUE
EMMETT, IDAHO 83617
TELEPHONE: 208-365-5385
FAX: 208-365-5389

e) Maintenance forms
f) Inventory
g) Preventative maintenance schedules

Administration

1) Equipment
   a) Trucks
   b) Tools
   c) disposables
2) Inventory
   a) Valves
   b) Meters
   c) Pumps
   d) Chemicals
   e) Spare parts
3) Ordering
4) Long term system improvements and expansion
5) Public Relations
6) Equipment specifications
7) Vendor contacts
8) Emergency contacts
9) P.M. scheduling
10) Record keeping
    a) Sampling
    b) P.M.'s
    c) Complaints
    d) Training
11) Budgeting
12) Billing
13) Reports to owner

Regulatory

CLEARWATER OPERATIONS, INC.
616 S. WASHINGTON AVENUE
EMMETT, IDAHO 83617
TELEPHONE: 208-365-5385
FAX: 208-365-5389

CITY OF EAGLE WATER SYSTEM
Phase II
PROPOSED SCOPE OF WORK

Phase II is the day to day, hands on operation of your water distribution system. These activities represent routine information collected and actions performed to maintain the system and appurtenances. Phase II complements the required documents and actions outlined in phase I and ensures the residents of the City of Eagle that they are supplied with a safe and adequate supply of potable water.

Operations

1) Facility inspection
2) System maintenance
3) Sampling
4) Meter sets
5) Shut-off/Turn-ons
6) Emergency response
7) Meter Reading

Operations Documents

1) Operations and Maintenance Plan
   a) Routine procedures
   b) Water usage
   c) Operating parameters controls
   d) Standard operating procedures
      i) Shut offs
      ii) Line locates
      iii) Emergency response
      iv) Hydrant flushing
      v) Well flushing
      vi) Valve exercising
      vii) Equipment inspection
      viii) All related duties

CLEARWATER OPERATIONS, INC.
616 S. WASHINGTON AVENUE
EMMETT, IDAHO 83617
TELEPHONE: 208-365-5385
FAX: 208-365-5389

2) Record keeping
   a) State approved plans
   b) Water quality monitoring records
   c) Annual reports
   d) Well capacities
   e) Waivers
3) Safety Manual
   a) Site security
   b) MSDS
   c) Lockout/tagout
   d) Traffic

APPENDIX J

APPENDIX J
(Unchanged)

See AMENDED MASTER PLAN
Revised November 2005

APPENDIX K

CLEARWATER OPERATIONS, INC.

616 S. WASHINGTON AVENUE
EMMETT, IDAHO 83617

TELEPHONE: 208-365-5385
FAX: 208-365-5389

Emergency Contact List
Eagle Water System

Clearwater Operations, Inc.

Office	365-5385
Ron Gearhart	573-7606
Travis Capson	573-7627
Chris Kossow	941-3591
Brian Wright	919-5668

Holladay Engineering

Office	853-6281
Kasey Ketterling	941-0989
Vern Brewer	598-1605

City of Eagle

City Hall	938-1789
Michael Echeita	939-0227 Ext. 217
Phil Bandy	938-1789

Emergency Services

Emergencies	911
Fire	939-6463
Ada County Sherriff - dispatch	377-6790
Ada County Sherriff – Admin	577-3306

Utilities

Dig Line	342-1583
Idaho Power	388-2323
Intermountain Gas	1-877-777-7442

CLEARWATER OPERATIONS, INC.

616 S. WASHINGTON AVENUE
EMMETT, IDAHO 83617

TELEPHONE: 208-365-5385
FAX: 208-365-5389

Clearwater Operations, Inc. Organizational

Ron Gearhart
Responsible Charge Operator
Office 365-5385
Cell 573-7606

↓

Travis Capson
Responsible Charge Back-up
Office 365-5385
Cell 573-7627

↓

Clint Seamons
Construction Management
Office 365-5385
Cell 941-6668

Brian Wright
Laboratory Services
Office 365-5385
Cell 919-5668

Local O&M Team
Chris Kossow
Office 365-5385
Cell 941-3519

→

Responders:
Daniel Kern 922-5971
Michael Pope 587-5294
James Simpson 350-8844

Ron Gearhart	Travis Capson	Brian Wright	Chris Kossow	Mike Pope	Jim Simpson	Den Kern
DWD1-14947	DWD1-14914	WWL4-11831	WWD2-15717	DWD2-15283	DWD1 – 11516	DWD3- 12780
WWC4-14152	WWC4-14153	WWC3-15015	WWC2-14465	DWT1- 11300	DWT2 – 11517	
WWL4-15601	WWL1-15136	WWT3-11832	WWT1-12951	WWT1-11299	WWT3 - 11515	
WWT4-10603	WWT4-10300	CDL	CDL			
WWTLA –14737	WWTLA-14758					
DWTOIT-15602	DWTOIT-15599					

APPENDIX L

Ownership & Maintenance Manuals:

Ownership and Maintenance (O&M) manuals for both the Eaglefield and Legacy well houses are on file with the City of Eagle. Each well house has full O&M manuals for all mechanical components. Below is a list of the available manuals identified by title on the cover, preparer and date. Copies of the original documents have not been appended to this document due to size. This information is available upon request.

Eagle Well #4 Well House (Legacy Well)

City of Eagle – Legacy Well #4 – Operating & Maintenance Manual
Southern Idaho Electric, date not specified.

Legacy Well House Pump System
Burgess Pump Co., Inc., November 30, 2007

Katolight Corporation [backup generator] – Model D250F*J4T3
Katolight, date not specified

Eagle Well #5 Well House (Eaglefield Well)

City of Eagle Eaglefield Well #5 – Operation and Maintenance Manual Volume 1
Challenger Companies, January 7, 2008