ADMINISTRATIVE RULES

OF THE

IDAHO WATER RESOURCE BOARD

WELL CONSTRUCTION STANDARDS RULES

IDAPA 37
TITLE 03
CHAPTER 09

TABLE OF CONTENTS

000. LEGAL AUTHORITY (RULE 0). 1
001. TITLE AND SCOPE (RULE 1). 1
002. WRITTEN INTERPRETATION (RULE 2). 1
003. ADMINISTRATIVE APPEALS (RULE 3). 1
004. INCORPORATION BY REFERENCE (RULE 4). 2
005. OFFICE HOURS -- MAILING ADDRESS AND STREET ADDRESS (RULE 5). 2
006. PUBLIC RECORDS ACT COMPLIANCE (RULE 6). 2
007. -- 009. (RESERVED) 2
010. DEFINITIONS (RULE 10). 2
011. -- 024. (RESERVED) 11
025. CONSTRUCTION OF COLD WATER WELLS (RULE 25). 11
026. -- 029. (RESERVED). 27
030. CONSTRUCTION OF LOW TEMPERATURE GEOTHERMAL RESOURCE WELLS AND BONDING (RULE 30). 27
031. -- 034. (RESERVED) 30
035. HEALTH STANDARDS (RULE 35). 31
036. -- 039. (RESERVED) 32
040. AREAS OF DRILLING CONCERN (RULE 40). 32
041. -- 044. (RESERVED) 33
045. DRILLING PERMIT REQUIREMENTS (RULE 45). 33
046. -- 049. (RESERVED) 36
050. PENALTIES (RULE 50). 36
051. -- 999. (RESERVED) 36
APPENDIX A 37

IDAPA 37
TITLE 03
CHAPTER 09

37.03.09 - WELL CONSTRUCTION STANDARDS RULES

000. LEGAL AUTHORITY (RULE 0).

The Idaho Water Resource Board adopts these administrative rules ~~rules under~~ with the authority provided by Section 42-238(12), Idaho Code. (~~7-1-93~~)

001. TITLE AND SCOPE (RULE 1).

01. Title. These rules shall be cited as IDAPA 37.03.09, "Well Construction Standards Rules." (~~7-1-93~~)

02. Scope. The Department of Water Resources has statutory responsibility for the statewide administration of the rules governing well construction. These rules establish minimum standards for the construction of all new wells and the modification and decommissioning (abandonment) of existing wells. ~~-~~The intent of the rules is to protect the ground water resources of the state against waste and contamination.~~for administering the appropriation and allotment of the ground water resources of the state and to protect the resource against waste and contamination. The 1987 Idaho Legislature enacted amendments to the existing statutes which requires amendment of the rules of well construction standards.~~ These rules are applicable to all water wells, monitoring wells, low temperature geothermal wells, injection wells, cathodic protection wells, closed loop heat exchange wells, and other artificial openings and excavations in the ground which are more than eighteen (18) feet in vertical depth below land surface as described in these rules pursuant to Section 42-230 Idaho Code. ~~Many~~ Some artificial openings and excavations ~~holes drilled into the ground~~ do not constitute a well. Artificial openings and excavations not defined as wells for the purposes of these Rules are described in Rule 045.03. Any time that such an artificial opening or excavation~~hole~~ is constructed, modified, or decommissioned (abandoned) the intent of these rules shall be observed. If waste or contamination is attributable to this type of artificial opening or excavation~~hole~~, the artificial opening or excavation~~hole~~ shall be modified, repaired, or decommissioned (abandoned) as determined by the Director. (~~7-1-93~~)

002. WRITTEN INTERPRETATION (RULE 2).

In accordance with Section 67-5201(19) (b)(iv), Idaho Code, the Idaho Department of Water Resources may draft and implement written statements that pertain to the interpretation of these Rules, or to the documentation of compliance with these Rules. ( )

003. ADMINISTRATIVE APPEALS (RULE 3).

Persons may be entitled to appeal agency actions authorized under these rules pursuant to Section 42-1701A, Idaho Code, and IDAPA 37.01.01, "Rules of Procedure of the Idaho Department of Water Resources". ( )

~~**004. -- 009. (RESERVED)**~~

004. INCORPORATION BY REFERENCE (RULE 4).

005. OFFICE HOURS -- MAILING ADDRESS AND STREET ADDRESS (RULE 5).

01. Office Hours. Office hours are 8 a.m. to 5 p.m. local time, Monday through Friday, except holidays designated by the State of Idaho. ( )

02. Mailing Address. The mailing address for the state office is
Idaho Department of Water Resources,
P.0. Box 83720,
Boise, Idaho 83720-0098 ( )

03. Street Address. The street addresses for the state office of the Department of Water Resources, the regional offices in Idaho Falls, Coeur d'Alene, Twin Falls, and Boise, and the satellite offices in Salmon, and Soda Springs may be obtained by calling the state office at (208) 287-4800, or by visiting the Department's website at http://www.idwr.idaho.gov. ( )

006. PUBLIC RECORDS ACT COMPLIANCE (RULE 6).
Records maintained by the Department of Water Resources are subject to the provisions of the Idaho Public Records Act, Title 9, Chapter 3, Sections 9-337 through 9-349, Idaho Code. ( )

008~~8~~7. -- 009. (RESERVED)

010. DEFINITIONS (RULE 10).
Unless the context otherwise requires, the following definitions ~~govern~~ apply to these rules.(~~7-1-93~~)

~~27~~01. Approved Seal or Seal Material. ~~The~~ Seal material shall consist of bentonite chips, pellets, or granules, bentonite grout, neat cement, or neat cement grout as defined by these Rules. No other materials may be used unless specifically authorized by the Director.~~impermeable material, such as cement grout, bentonite grout, or puddling clay, placed in the annular space between the borehole wall and the permanent casing, to prevent the downhole movement of water or the vertical movement and mixing of artesian waters. Seals may not be installed dry unless in granular form and above the water table.~~ (~~7-1-93~~)

~~**01. Abandoned Well**. Any well which has been filled or plugged so that it is rendered unproductive and will prevent contamination of the ground water. A properly abandoned well will not produce water nor serve as a channel for movement of water from the well or between water-bearing zones. (7-1-93)( )~~

02. Annular Space. The space, measured as one-half (1/2) the difference in diameter between two (2) concentric cylindrical objects, one of which surrounds the other, such as the space between the walls of a drilled hole (~~well~~ borehole) and a casing or the space between ~~a temporary surface~~two (2) strings of casing. ~~and a permanent casing.~~ (~~7-1-93~~)

03. Aquifer. Any geologic formation(s) that will yield water to a well in sufficient

quantities to make the production of water from ~~this~~ the formation feasible for beneficial use. ~~(7-1-93~~)

04. Area of Drilling Concern. An area designated by the Director in which drillers must comply with additional standards to prevent waste or contamination of ground or surface water due to such factors as aquifer pressure, vertical depth of the aquifer, warm or hot ground water, or contaminated ground or surface waters, in accordance with Section 42-238(~~7~~15), Idaho Code. ~~(7-1-93~~)

05. Artesian Water. Any water that is confined in an aquifer under pressure so that the water will rise in the well casing or drilled hole above the elevation where it was first encountered. This term includes water of flowing and non-flowing wells. ~~and water under pressure in wells that do not flow~~. ~~(7-1-93~~)

06. Artificial ~~Gravel~~Filter Pack. ~~The placement of~~ Clean, rounded, smooth, uniform, sand or gravel placed~~or other permeable material~~ in the annular space around a perforated well casing or well screen. A ~~gravel~~filter pack is frequently used to prevent the movement of finer material into the well casing and to increase ~~the ability of the~~ well ~~to yield water~~efficiency. ~~(7-1-93~~)

07. Bentonite. A commercially processed and packaged, low permeability, sodium montmorillonite clay certified by the National Sanitation Foundation (NSF) for use in well construction, sealing, plugging, and decommissioning (abandonment). All bentonite products used in the construction or decommissioning (abandoning) of wells shall have a permeability rating not greater than 10^{-7} cm/sec. ( )

a. Chips. Bentonite composed of pieces ranging in size from 1/4-inch to one (1) inch on their greatest dimension. ( )

b. Granules (also Granular). Bentonite composed of pieces ranging in size from 1/32-inch (#20 standard mesh) to 7/32-inch (#3 standard mesh) on their greatest dimension.( )

c. Bentonite Grout. A mixture of bentonite specifically manufactured for use as a well sealing or plugging material and potable water to produce a grout with an active solids content not less than 25% by weight e.g., (25% solids content by weight = 50 pounds bentonite per 18 gallons of water). ( )

d. Pellets. Bentonite manufactured for a specific purpose and composed of uniform sized, 1/4-inch, 3/8-inch, or 1/2-inch pieces on their greatest dimension. ( )

~~07~~08. Board. The Idaho Water Resource Board. (7-1-93)

~~08~~09. Bore Diameter. The diameter of the hole in the formation made by the drill bit or reamer. (7-1-93)

10. Borehole (also Well Bore). The subsurface hole created during the drilling process. ( )

~~09~~11. Bottom Hole Temperature of an Existing or Proposed Well. The temperature of the ground water encountered in the bottom of a well or borehole. (~~7-1-93~~____)

~~10~~12. Casing. The permanent conduit installed in a well to provide physical stabilization, prevent caving or collapse of the borehole, ~~to~~ maintain the well opening and serve as a solid inner barrier to allow for the installation of an annular seal. ~~to prevent waste and contamination of the ground water as required by these standards, or as otherwise used in the construction of a well. It~~ Casing does not include temporary surface casing, well screens, ~~or~~ liners, or perforated casing as otherwise defined by these rules~~used in the construction of a well~~.(~~7-1-93~~____)

~~11~~13. Cathodic Protection Well. Any artificial excavation in excess of eighteen (18) feet in vertical depth constructed for the purpose of protecting certain metallic equipment in contact with the ground. Commonly referred to as cathodic protection. (7-1-93)

~~**12. Cement Grout**. A mixture of water and cement in the ratio of not more than six (6) gallons of water to a ninety-four (94) pound sack of portland cement which is fluid enough to be pumped through a small-diameter pipe. To obtain a better flowing mixture, three (3) to five (5) pounds of bentonite may be added per sack of cement and the water increased to not more than six and one-half (6.5) gallons per sack of cement. Other cement grout or neat cement mixes may be used. These mixes shall be mixed and installed in accordance with the American Petroleum Institute Standards - API Class A through H. As found in API RP10B "Recommended Practice for Testing Oil Well Cements and Cement Additives," current edition or other approved standards.(7-1-93)~~

14. Closed Loop Heat Exchange Well. A ground source thermal exchange well constructed for the purpose of installing any underground system through which fluids are circulated but remain isolated from direct contact with the subsurface or ground water. (____)

~~13~~15. Conductor Pipe. The first and largest diameter string of permanent casing to be installed in a low temperature geothermal resource well.~~This casing extends from land surface to a depth great enough to keep surface waters from entering and loose earth from falling in the hole prior to setting surface casing.~~ (~~7-1-93~~____)

16. Confining Layer. A subsurface zone of low-permeability earth material that naturally acts to restrict or retard the movement of water or contaminants from one zone to another. The term does not include topsoil. (____)

~~14~~17. Consolidated Formations. Naturally-occurring geologic formations that have been lithified (turned to stone) such as sandstone and limestone, or ~~shale,~~ igneous rocks such as basalt and rhyolite, and metamorphic rocks such as gneiss and slate.~~The term is sometimes used interchangeably with the word "bedrock" and includes rocks such as basalt, rhyolite, sandstone, limestone and shale. Commonly, these formations will stand at the edges of a bore hole without caving~~ (~~7-1-93~~____)

18. Contaminant. Any physical, chemical, ion, radionuclide, synthetic organic compound, microorganism, waste, or other substance which does not occur naturally in ground water or which naturally occurs at a lower concentration. ( )

~~15~~**19. Contamination**. The introduction into the natural ground water of any physical, chemical, biological or radioactive material which may: (7-1-93)

a. Cause a violation of ~~State~~Idaho ~~Drinking~~ Ground Water Quality Standards; or (~~7-1-93~~)

b. Adversely affect the health of the public; or (7-1-93)

c. Adversely affect a designated ~~and~~or ~~protected~~ beneficial use of the State's ground water. Contamination includes the introduction of heated ~~water~~ or cooled water into the ~~ground water if the~~subsurface that will alter~~ation~~ ~~of~~ the ground water temperature and render~~s~~ the local ground water less suitable for beneficial use, or the introduction of any contaminant that may cause a violation of IDAPA 58.01.11, "Ground Water Quality Rule". (~~7-1-93~~)

20 Decommissioned (Abandoned) Well. Any well which has been permanently removed from service and filled or plugged in accordance with these rules so as to meet the intent of these Rules. A properly decommissioned well will not

a. produce or accept fluids

b. serve as a conduit for the movement of contaminants inside or outside the well casing

c. allow the movement of surface or ground water into unsaturated zones, into another aquifer, or between aquifers. ( )

21. Decontamination. The process of cleaning equipment intended for use in a well in order to prevent the introduction of contaminants into the subsurface and contamination of natural ground water. ( )

~~16~~**22. Department**. The Idaho Department of Water Resources. (7-1-93)

23. Dewatering well. A well constructed for the purpose of improving slope stability, dry up borrow pits, or intercepting seepage that would otherwise enter an excavation. ( )

~~17~~**24. Director**. The Director of the Idaho Department of Water Resources or his duly authorized representatives. (7-1-93)

25. Disinfection. The introduction of chlorine or other agent or process approved by the Director in sufficient concentration and for the time required to inactivate or kill fecal and Coliform bacteria, indicator organisms, and other potentially harmful pathogens. ( )

26. Draw down. The difference in vertical distance between the static water level and the pumping water level. ( )

27. Drive Point (also known as a Sand Point). A conduit pipe or casing through which ground water of any temperature is sought or encountered created by joining a "drive point unit" to a length of pipe and driving the assembly into the ground. ( )

28. Exploratory Well. a well drilled for the purpose of discovering or locating new resources in unproven areas. They are used to extract geological, hydrological, or geophysical information about an area. ( )

29. Global Positioning System (GPS). A global navigational receiver unit and satellite system used to triangulate a geographic position. ( )

30. Hydraulic Conductivity. A measurement of permeability. ( )

~~18~~31. Hydraulic Fracturing. A process whereby water or other fluid is pumped under high pressure into a well to further fracture ~~and clean-out~~ the reservoir rock or aquifer surrounding the production zone of a well ~~bore thus~~to ~~increasing~~ increase ~~the flow into the~~ well yield. (~~7-1-93~~)

~~19~~32. Injection Well. Any excavation or artificial opening into the ground which meets the following three (3) criteria: (7-1-93)

a. It is a bored, drilled or dug hole, or is a driven mine shaft or driven well point; and (7-1-93)

b. It is deeper than its largest straight-line surface dimension; and (7-1-93)

c. It is used for or intended to be used for subsurface placement of fluids. (7-1-93)

~~20~~33. Intermediate String or Casing. The casing installed and sealed below the surface casing within a low temperature geothermal resource well to ~~seal out~~isolate ~~brackish~~ undesirable water~~,~~ or ~~caving~~ zones~~, etc.,~~ below the bottom of the surface casing. Such strings may either be lapped into the surface casing or extend to land surface. (~~7-1-93~~)

34. Liner. A conduit pipe that can be removed from the borehole or well, used to: a) serve as access and protective housing for pumping equipment, and b) provide a pathway for the upward flow of water within the well. Liner does not include casing required to: a) prevent caving and/or collapse of the borehole, or b) serve as a solid inner barrier to allow for the installation of an annular seal. ( )

~~21~~35. Mineralized Water. Any naturally-occurring ground water that has an unusually high amount of chemical constituents dissolved within the water. Water with ~~above~~ five thousand (5000) ~~ppm~~ mg/L or greater total dissolved solids is considered mineralized. (7-1-93)

~~22~~36. Modify. To deepen a well, increase or decrease the diameter of the casing or the well bore, install a liner, place a screen, perforate existing casing or liner, alter the seal between

the casing and well bore, or alter the well to not meet well construction standards. ( )
~~A change in the construction of an existing well which deepens the well, increases the dimensions of the well or which causes or may cause the well to not meet the minimum well construction standards as determined by the Director. (7-1-93)~~

~~23~~37. **Monitoring Well**. Any well more than eighteen (18) feet in vertical depth constructed to evaluate, observe or determine the quality, quantity, temperature, pressure or other characteristics of the ground water or aquifer. (7-1-93)

38. **Neat Cement**. A mixture of water and cement in the ratio of not more than six (6) gallons of water to ninety-four (94) pounds of Portland cement (neat cement). Other cement grout mixes may be used if specifically approved by the Director. (7-1-93)

39. **Neat Cement Grout.** Up to five (5) % bentonite by dry weight may be added per sack of cement (neat cement grout) and the water increased to not more than six and one-half (6.5) gallons per sack of cement. Other neat cement mixes may be used if specifically approved by the Director. These grouts shall be mixed and installed in accordance with the American Petroleum Institute Standards - API Class A through H. As found in API RP10B "Recommended Practice for Testing Oil Well Cements and Cement Additives," current edition or other approved standards. ( )

40. **Oxidized Sediments**. Sediments, characterized by distinct coloration, typically shades of brown, red, or tan, caused by the alteration of certain minerals in an environment with a relative abundance of oxygen. ( )

41. **Perforated Well Casing.** Well casing that has been modified by the addition of openings created by drilling, torch cutting, saw cutting, mechanical down-hole perforator, or other method. ( )

~~24~~42. **Pitless Adaptor or Pitless Unit**. An assembly of parts designed for attachment to a well casing which allows buried ~~pump~~ pipe ~~discharge~~ to convey water from the well or pump and allows access to the interior of the well casing for installation or removal of the pump or pump appurtenances, while maintaining a water tight connection through the well casing and preventing contaminants from entering the well. (~~7-1-93~~)

43. **Potable Water**. Water, of adequate quality, for human consumption. ( )

44. **Pressure Grouting (Grouting).** The process of pumping and placing an approved grout mixture into the required annular space, by positive displacement from bottom to top using a tremie pipe, Halliburton method, float shoe, or other method approved by the Director. ( )

~~25~~45. **Production ~~String~~Casing**. The casing or tubing through which a low temperature geothermal resource is produced. This string extends from the producing zone to land surface. (~~7-1-93~~)

46. Public Water System. A system for the provision to the public of water for human consumption through pipes or, after August 5, 1998, other constructed conveyances, if such system has at least fifteen (15) service connections, regardless of the number of water sources or configuration of the distribution system, or regularly serves an average of at least twenty-five (25) individuals daily at least sixty (60) days out of the year. Such term includes: any collection, treatment, storage, and distribution facilities under the control of the operator of such system and used primarily in connection with such system; and any collection or pretreatment storage facilities not under such control which are used primarily in connection with such system. Such term does not include any "special irrigation district." A public water system is either a "community water system" or a "non-community water system." ( )

~~**26. Puddling Clay**. A mixture of bentonite, other expansive clays, fine-grained material and water, in a ratio of not less than seven (7) pounds of bentonite or expansive clay per gallon of water. Puddling clay must be composed of not less than fifty (50%) percent expansive clay with the maximum size of the remaining portion not exceeding that of coarse sand. (7-1-93)~~

47. Reduced Sediments. Sediments, characterized by distinct coloration, typically shades of blue, black, gray, or green, caused by the alteration of certain minerals in an oxygen poor environment. ( )

48. Remediation Well. A well used to inject or withdraw fluids, vapor, or other solutions approved by the Director for the purposes of remediating, enhancing quality, or controlling potential or known contamination. Remediation wells include those used for air sparging, vapor extraction, or injection of chemicals for remediation or in-situ treatment of contaminated sites. ( )

49. Sand. Any sediment particle retained on a U.S. standard sieve #200 (0.075 mm to 2 mm). ( )

50. Screen (well screen). A commercially produced structural tubular retainer with standard sized openings to facilitate production of sand free water. ( )

~~**27. Seal or Seal Material**. The impermeable material, such as cement grout, bentonite grout, or puddling clay, placed in the annular space between the borehole wall and the permanent casing, to prevent the downhole movement of water or the vertical movement and mixing of artesian waters. Seals may not be installed dry unless in granular form and above the water table. (7-1-93)~~

51 Seal or Sealing. The placement of approved seal material in the required annular space between a borehole and casing, between casing strings, or as otherwise required to create a low permeability barrier and prevent movement or exchange of fluids. Seals are required in the construction of new wells, repair of existing wells, and in the decommissioning (abandonment) of wells. Seals are essential to the prevention of waste and contamination of ground water. ( )

52. Start Card. An expedited drilling permit process for the construction of cold water Single Family residential wells. ( )

53. Static Water Level. The height at which water will rise in a well under non-pumping conditions. ( )

~~28~~54. **Surface Casing**. The first string of casing in a low temperature geothermal resource well which is ~~run~~ set and sealed after the conductor pipe to anchor blow out prevention equipment and to case and seal out all existing cold ground water zones. (~~7-1-93~~)

55. **Temporary Surface Casing**. Steel pipe used to support the borehole within unstable or unconsolidated formations during construction of a well that shall be removed following the installation of the permanent well casing and prior to or during placement of an annular seal. ( )

56. **Thermoplastic/PVC Casing**. Plastic piping material meeting the requirements of ASTM F 480 and specifically designed for use as well casing. ( )

57. **Transmissivity.** The capacity of an aquifer to transmit water through its entire saturated thickness. ( )

58. **Tremie Pipe.** A small-diameter pipe used to convey grout, dry bentonite products, or filter pack materials into the annular space, borehole, or well from the bottom to the top of a borehole or well. ( )

59. **Unconfined Aquifer.** An aquifer in which the water table is in contact with and influenced by atmospheric pressure through pore spaces in the overlying formation(s). ( )

~~29~~60. **Unconsolidated Formation**. A naturally-occurring earth formation that has not been lithified. Alluvium, soil, sand, gravel, clay, and overburden are some of the terms used to describe this type of formation. (7-1-93)

61. **Unstable Unit**. Unconsolidated formations, and those portions of consolidated formations that are not sufficiently hard or durable to sustain an open borehole without caving or producing obstructions without the aid of fluid hydraulics or other means of chemical or physical stabilization. ( )

62. **Unusable Well.** Any well that can not be used for its intended purpose or other beneficial use authorized by law. ( )

63. **Waiver.** A written request from a driller or well owner to the Director describing, in detail, how the intent of ground water resource protection can be achieved without employing a specific requirement of these rules. ( )

64. **Waste**. The loss, transfer, or subsurface exchange of a ground water resource, thermal characteristic, or natural artesian pressure from any aquifer caused by improper construction, misuse, or failure to properly maintain a well. Waste includes: ( )

a. The flow of water from an aquifer into an unsaturated subsurface zone; ( )

b. The transfer and/or mixing of waters from one aquifer to another (aquifer commingling); or ( )

c. The release of ground water to the land surface whenever such release does not comply with an authorized beneficial use. ( )

65. Water Table. The height at which water will rise in a well, also the upper surface of the zone of saturation in an unconfined aquifer. This level will change over time due to changes in water supply and aquifer impacts. ( )

~~30~~66. Well. An artificial excavation or opening in the ground more than eighteen (18) feet in vertical depth below land surface by which ground water of any temperature is sought or obtained. The depth of a well is determined by measuring the maximum vertical distance between the land surface and the deepest portion of the well. Any water encountered in the well is considered to be obtained for the purpose of these rules. Well also means any waste disposal and injection well as defined by Section 42-3902, Idaho Code.~~any injection well more than eighteen (18) feet in vertical depth below land surface and any test well, monitoring well, cathodic protection well, observation well or exploratory well more than eighteen (18) feet in vertical depth below land surface that is constructed to evaluate the ground water resource or to evaluate contamination of the resource.~~ Well does not mean a hole drilled for mineral exploration, or holes drilled for oil and gas exploration ~~(for~~ which are subject to the requirements of ~~permit has been issued pursuant to~~ Section 47-320, Idaho Code~~)~~, ~~for dam or building foundation dewatering, for foundation geotechnical evaluations, for the installation of standpipes or piezometers installed near dams, buildings or other construction sites for the sole purpose of measuring uplift forces caused by water~~ or for the purpose of collecting soil samples above the water table. (~~7-1-93~~)

67. Well Development. The act of bailing, jetting, pumping, or surging water in a well to remove drilling fluids, fines, and suspended materials from within a completed well and production zone to establish the optimal hydraulic connection between the well and the aquifer.( )

~~31~~68. Well Driller or Driller. Any person who operates drilling equipment, or who controls or supervises the construction of a well and is licensed under Section 42-238, Idaho Code.~~Any person who excavates or opens a well or wells for compensation or otherwise upon any land of the well driller or upon other land. Well driller does not include those persons who construct a well on their own property for their own use without the aid of any power driven mechanical equipment.~~ (~~7-1-93~~)

~~32~~69. Well Drilling or Drilling. The act of constructing a new well or ~~deepening or~~ modifying or changing the construction of an existing well. ~~by any percussion, rotary, boring, digging, jetting or auguring method.~~ (~~7-1-93~~)

~~33~~70. Well Owner. Any person, firm, partnership, co-partnership, corporation, association, or other entity, or any combination of these, who owns the property on which the well is or will be located or has secured ownership of the well by means of ~~The owner of the land on which the well is located unless~~ a deed, covenant, contract, easement, or other enforceable

legal instrument for the purpose of benefiting from the well.~~documentation acceptable to the director is provided to demonstrate that the well is owned by another.~~ (~~7-1-93~~____)

~~34~~71. **Well Rig (Drill Rig)**. Any power driven percussion, rotary, boring, digging, jetting or auguring machine used in the construction of a well. (~~7-1-93~~____)

011. -- 024. (RESERVED)

025. CONSTRUCTION OF COLD WATER WELLS (RULE 25).

01. General.~~(7-1-93)~~ All persons constructing wells shall comply with the requirements of Section 42-238, Idaho Code, and IDAPA 37.03.10, "Well Driller Licensing Rules". The standards specified in Rule 25 apply to all wells with a bottom hole temperature of eighty-five (85) degrees Fahrenheit or less. Wells with a bottom hole temperature greater than eighty five (85) degrees Fahrenheit but less than 212 degrees Fahrenheit, shall meet the requirements of Rule 30 in addition to meeting the requirements of Rule 25. These standards also apply to any waste disposal and injection well as defined by Section 42-3902, Idaho Code. The well driller shall construct each well:~~(7-1-93)~~(____)

a. In accordance with these rules and with the conditions of approval of any drilling permit issued pursuant Section 42-235, Idaho Code, and ~~All wells shall be constructed~~ in a manner that will ~~guard against~~prevent waste and contamination of the ground water resources of the state of Idaho. The adopted standards are minimum standards which must be adhered to in the construction of all new wells, and in the modification or decommissioning (abandonment) of existing wells. ~~The Director shall, when necessary to protect the ground water resource, require that specific wells be constructed in compliance with such additional standards as determined necessary. All wells constructed for domestic water shall, in addition to meeting these standards, meet all of the siting and distance requirements set forth by the appropriate District Health Department and Idaho Department of Environmental Quality rules.~~ The well driller ~~and the property owner are~~is charged with the responsibility of ~~taking whatever steps might be necessary in any unique situation to guard against~~preventing waste ~~and~~ or contamination of the ground water resources during the construction, modification or abandonment of a well. The Director may add conditions of approval to a drilling permit issued pursuant to Rule 045 of these rules to require that a well be constructed, modified, or decommissioned (abandoned) in accordance with additional standards when necessary to protect ground water resources and the public health and safety from existing contamination and waste or contamination during the construction, modification or decommissioning (abandonment) of a well. ~~It will be necessary in some cases to construct wells with significant additional controls beyond the minimum standards to accomplish these goals.~~ (____)

b. In consideration of the geologic and ground water conditions known to exist or anticipated at the well site.~~If, in any given unique case, it appears that the ground water resources can be protected against waste and contamination without complying with the minimum well construction standards, a written request for a waiver may be submitted to the Department. If the Director determines that the waiver can be granted, the well can be constructed with some variance from the minimum standards. In order to prevent unnecessary delay the Director may~~

~~grant a waiver, upon oral request, provided that the oral request is followed by a written request as specified above.~~ (~~7-1-93~~)

c. Such that it is capable of producing, where obtainable, the quantity of water to support the allowed or approved beneficial use of the well, subject to law;~~The standards specified in Rule 25 apply to all wells with a bottom hole temperature of eighty-five (85) Degrees F or less. These standards also apply to injection wells and monitoring wells except as conditioned by any permits issued by the Department. Injection wells shall also comply with the IDAPA 37.03.03, "Rules for the Construction and Use of Injection Wells."~~ (~~7-1-93~~)

d. To meet the siting and separation distance requirements in the table below and the siting and separation distance requirements set forth by the governing District Health Department and the Idaho Department of Environmental Quality rules IDAPA 58.01.03, "Individual/Subsurface Sewage Disposal Rules", and IDAPA 58.01.08, "Idaho Rules for Public Drinking Water Systems" current at the time of well completion. ( ):

Separation of Well from:	Minimum Separation Distance (feet)
Existing Public Water Supply well, separate ownership	50
Other existing well, separate ownership	25
Septic drain field	100
Septic tank	50
Drainfield of system with more than 2,500 GPD of sewage inflow	300*
Sewer line - main line or sub-main, pressurized, from multiple sources	100
Sewer line - main line or sub-main, gravity, from multiple sources	50
Sewer line - secondary, pressure tested, from a single residence or building	25
Effluent pipe	50
Property line	5
Permanent buildings, other than those to house the well and/or plumbing apparatus	10
Above ground chemical storage tanks	20
Permanent (more than six months) or intermittent (more than two months) surface water	50
Canals, irrigation ditches or laterals, and other temporary (less than two months) surface water	25

*This distance may be less if data from a site investigation demonstrates compliance with IDAPA 58.01.03 separation distances. ( )

02. **Waivers.** In unique cases, where the Director concludes that the ground water resources will be protected against waste and contamination, and the public health and safety are not compromised, a waiver of specific standards required by these rules may be approved prior to constructing, decommissioning, or modifying a well. The well driller and well or property owner shall jointly submit a detailed plan and written request identifying a specific Rule(s) proposed to be waived. The plan shall additionally detail well construction process that will be employed in lieu of complete Rule compliance. Prior to submittal, the plan and written request shall be signed by the well driller and well owner acknowledging concurrence with the request. The plan and request shall be submitted by facsimile, email, or letter. The Director will evaluate and respond to the request within ten (10) business days of receiving the request. If the waiver is

approved the intent of the rules shall be served and all standards not waived shall apply. Waivers approved by the Director will not super cede requirements of other regulatory agencies without specific concurrence from that agency. Work activity related to a waiver request shall not proceed until a written or verbal approval is granted by the Director. Any verbal approval will be followed by a written approval. ( )

03. Records. In order to enable a comprehensive survey of the extent and occurrence of the state's ground water resource, every well driller shall maintain records as described in IDAPA 37.03.10 "Well Driller Licensing Rules" pursuant to Section 42-238(11), Idaho Code and provide the well owner with a copy of the approved well drilling permit and a copy of the well driller's report when submitted to the Director. ( )

~~02~~**04. Casing.**~~(7-1-93)~~ The well driller shall install casing in every well. Steel or thermoplastic casing may be installed in any well with a bottom hole temperature of eighty-five (85) ~~F~~degrees Fahrenheit or less. Thermoplastic pipe shall not be installed in a well with a bottom hole temperature greater than eighty-five (85) degrees Fahrenheit. All casing to be installed must be new or in like-new condition, free of defects, and clearly marked by the manufacturer with all specifications required by these rules. For ~~water~~ all wells ~~and injection wells~~ the casing shall extend at least twelve (12) inches above land surface and finished grade and to a minimum depth ~~of eighteen (18) feet~~ below land surface ~~or as~~ required by these rules. Concrete slabs around a well casing will be considered finished grade (Figure 01, Appendix A).~~Rule 025.03 below.~~ The well driller shall install casing of sufficient strength to withstand calculated and anticipated subsurface forces and corrosive effects. The well driller shall install casings sufficiently plumb and straight to allow the installation or removal of screens, liners, pumps and pump columns without causing adverse effects on the operation of the installed pumping equipment. ( )

a. Steel Casing.~~Casing shall be installed in every well. For water wells and injection wells the casing shall extend at least twelve (12) inches above land surface and finished grade and to a minimum depth of eighteen (18) feet below land surface or as required by Rule Subsection 025.03 below. Open well pits with the casing below finished grade are not allowed without written approval by the Director. Upon completion of drilling and prior to removal of well drilling equipment from a water well site, the top of the casing shall be completely covered with a one fourth inch (1/4") thick solid, new or like-new steel plate welded in place, a threaded cap, or a watertight sanitary seal cover cap. In every instance where well casing is installed in a well, it shall be of steel in new, or like-new condition, and be free of pits and breaks.~~ When steel casing lengths are joined together, they shall be joined by welded joints or screw-couple joints. All connections ~~which~~ shall be water tight ~~or by other means as approved by the Director~~. If ~~welded~~ steel casing joints are welded, the weld shall be at least as thick as the ~~wall thickness of the~~ well casing and fully penetrating.~~The specifications below under "Nominal Wall thickness" will be enforced, allowing a twelve and one half (12.5%) percent manufacturing tolerance. All permanent steel casing required to be installed in a well shall meet the minimum specifications listed in Table 1 shown below:~~ Welding rods or flux core wire of at least equal quality to the casing metal shall be used. Casing ends to be joined by welding shall be properly prepared, beveled and gapped to allow full penetration of the weld. All stick welded joints shall have a minimum of two (2) passes including a "root" pass and have minimal undercut when complete.(~~7-1-93~~)

i. All wells that are constructed for public water systems shall, in addition to meeting these standards, meet all of the casing wall thickness requirements set for the by the Idaho Department of Environmental Quality Rules, IDAPA 58.01.08, "Idaho Rules for Public Drinking Water Systems." ( )

ii. The well driller shall install steel casing that meets or exceeds the American Society of Testing and Materials (ASTM) standard A53, Grade B or American Petroleum Institute (API) 5L Grade B, and that meets the following specifications for wall thickness: ( )

Minimum Single-Wall Steel Well Casing Thickness[1] for Selected Diameters (in.)

Nominal Diameter (in.)[3]	6[2]	8	10	12	14	16	18	20	22	24	26	28	30
Depth (ft.)	**Nominal Wall Thickness (in.)[1]**												
<100	0.250	0.250	0.250	0.250	0.250	0.250	0.250	0.250	0.250	0.250	0.250	0.250	0.250
100-200	0.250	0.250	0.250	0.250	0.250	0.250	0.250	0.250	0.250	0.250	0.250	0.250	0.250
200-300	0.250	0.250	0.250	0.250	0.250	0.250	0.250	0.250	0.250	0.250	0.250	0.250	0.250
300-400	0.250	0.250	0.250	0.250	0.250	0.250	0.250	0.250	0.250	0.375	0.375	0.375	0.375
400-600	0.250	0.250	0.250	0.250	0.250	0.250	0.250	0.250	0.375	0.375	0.375	0.375	0.375
600-800	0.250	0.250	0.250	0.250	0.250	0.250	0.375	0.375	0.375	0.375	0.375	0.375	0.375
800-1000	0.250	0.250	0.250	0.250	0.375	0.375	0.375	0.375	0.375	0.375	0.375	0.375	0.375
1000-1500	0.280	0.322	0.365	0.375	0.375	0.375	0.375	0.375	0.375	0.375	0.375	0.375	0.375
1500-2000	0.280	0.322	0.365	0.375	0.375	0.375	0.375	0.375	0.375	0.375	0.375	0.375	0.375

[1]Compliance with the minimum nominal wall thicknesses listed is required for any depth or location where casing is used to prevent caving and/or collapse of the borehole or serves as a solid inner barrier to allow for the installation of an annular seal. [2]For nominal casing diameters less than 6 inches, the minimum nominal wall thickness shall be equivalent to ASTM Schedule 40. [3]For any other casing diameter not addressed herein, prior approval by the Director is required. ( )

~~Permanent Steel Casing Minimum Specifications~~			
~~Nominal Size (inches)~~	~~Outside Diameter (inches)~~	~~Nominal Wall Thickness (inches)~~	~~Weight Per Ft. (lbs.)~~
~~1 1/2~~	~~1.900~~	~~.145~~	~~2.72~~
~~2~~	~~2.375~~	~~.154~~	~~3.65~~
~~2 1/2~~	~~2.875~~	~~.203~~	~~5.79~~
~~3~~	~~3.500~~	~~.216~~	~~7.58~~
~~3 1/2~~	~~4.000~~	~~.226~~	~~9.11~~
~~4~~	~~4.500~~	~~.237~~	~~10.79~~
~~5~~	~~5.500~~	~~.244~~	~~13.70~~
~~6 or greater~~		~~.250~~	

~~(7-1-93)~~

b. **Thermoplastic Casing.** ~~Plastic Well Casing may be used for monitoring wells. The use of plastic well casing for water wells shall be considered on a case-by-case basis upon the submittal of a waiver request. Plastic casing may be used as a liner inside the required casing without a waiver or written approval. The specifications of any plastic casing to be used shall meet or exceed ASTM Standard F-480.~~ Thermoplastic casing may be used in monitoring wells and cold water wells if drilling of the borehole confirms its suitability for use. Thermoplastic casing shall conform to ASTM F 480 and NSF-WC. The well driller shall not use thermoplastic casing under any condition where the manufacturer's resistance to hydraulic collapse pressure (RHCP) or total depth specifications are exceeded. Thermoplastic casing extending above-ground shall be protected from physical and ultraviolet light damage by enclosing it within steel casing extending at least twelve (12) inches above land surface and finished grade and to a minimum depth of eighteen (18) feet below land surface or five (5) feet below land surface for monitoring wells. (~~7-1-93~~)

i. Thermoplastic pipe used in wells as casing or liner shall have a minimum rating of SDR-21. For nominal diameters of four (4) inches or less, a minimum rating of Schedule 40 is required. If used as casing within unconsolidated or unstable consolidated formations, thermoplastic pipe shall be centralized and fully supported throughout the unstable zone(s) with filter pack or seal material as required by these rules. ( )

ii. All thermoplastic casing and liner shall be installed in accordance with the manufacturer's recommendations and specifications, and as required by these rules. The well driller shall not treat thermoplastic pipe in any manner that would adversely affect its structural integrity. The well driller shall: ( )

iii. Ensure that the weight of the pump assembly, if secured to the thermoplastic pipe, does not exceed the weight limitations per manufacturer's recommendations or cause damage to the pipe resulting in breaks or leaks. ( )

iv. Not use Type III (high-early strength) Portland cement-based seal materials in direct contact with thermoplastic pipe unless approved by the Director. ( )

vii. Not drive, drop, force, or jack thermoplastic pipe into place. Thermoplastic pipe shall be lowered or floated into an oversized, obstruction-free borehole. ( )

c. **Perforated Well Casing.** Perforated well casing may be used in the construction or decommissioning of a well when such application does not violate any standards required by these Rules. ( )

05 **Liner.** In addition to well casing, liners may be installed in wells to prevent damage to pumping equipment. Steel or thermoplastic pipe may be installed as liner in a well with a bottom hole temperature of eighty-five (85) degrees Fahrenheit or less. Thermoplastic liner shall conform to ASTM F 480 and NSF-WC. Thermoplastic liners shall not be used in unconsolidated formations or unstable units. ( )

06. **Screen.** Well screens shall be used in constructing a well when necessary to avoid sand production (see sand production, Rule 25.24). Well screens shall be commercially manufactured; slotted, louvered, or wire wrapped and installed according the manufacturers specifications. ( )

a. Screens may require a filter pack consisting of sand or gravel to further reduce the quantity of sand produced from the well. ( )

b. The well driller shall not install well screens, perforated casing or filter pack across a confining layer(s) separating aquifers of different pressure, temperature, or quality. ( )

~~03~~07. ~~Sealing of Casing.~~ Use of Approved Sealing Materials and Required Annular Space. ~~a.Well casings shall be sealed to prevent the possible downward movement of contaminated surface waters in the annular space around the well casing. The seal shall also prevent the upward movement of artesian waters within the annular space around the well casing that could result in the waste of ground water. The sealing is also to prevent the movement of ground water either upward or downward from zones that have been cased out of the well due to quality or other reasons. The seal material shall consist of cement grout, puddling clay or bentonite grout. The use of well cuttings alone is not an approved seal. (7-1-93)~~ Well casings shall be sealed in the required annular space with approved material to prevent the possible downward movement of contaminated surface waters or other fluids in any annular space around the well casing (Figure 02, Appendix A). Proper sealing is also required to prevent the movement of groundwater either upward or downward from zones of different pressure, temperature or quality, within the well or outside the casing. The Well Driller shall notify by phone the Department's appropriate Region Office at least four-hours in advance of placing any annular seal to provide Department staff the opportunity to observe seal placement. ( )

a. All casing to be sealed shall be adequately centralized to ensure uniform seal thickness around the well casing. Surface seals shall extend to not less than thirty-eight (38) feet below land surface for well depths greater than thirty-eight (38) feet. For well depths less than thirty-eight (38) feet, seals shall extend to depths as hereafter required. ( )

~~**b.** One (1) of the following methods shall be used in placing surface seals: (7-1-93)~~

~~i. An open free standing hole, two (2) inches greater in diameter than the outside diameter of the permanent casing shall be drilled, or temporary surface casing at least two (2) pipe sizes larger than the permanent casing (six (6) inch permanent casing requires eight (8) inch temporary casing) shall be installed to a minimum depth of eighteen (18) feet below land surface, or to such additional depth as hereafter required (Figure 1.1a in APPENDIX A, located at the end of this chapter). If an open hole is drilled and permanent casing installed, the annular space between the wall and permanent casing shall be filled with puddling clay or bentonite grout during drilling. If the well is drilled open, the annular space must be filled with seal material and maintained full during installation of the permanent casing. If a temporary casing has been installed, upon completion of the drilling, the annular space shall be filled with seal material and kept full while withdrawing the temporary casing. (7-1-93)~~

~~ii. A temporary casing a minimum of six (6) inches in diameter greater than the~~

~~permanent casing and a minimum of five (5) feet in length shall be installed. The temporary casing shall extend not less than one (1) foot above ground surface and not less than three (3) feet below ground surface. The annular space shall be kept full of seal material in a slurry condition at all times during drilling. Upon completion of drilling, the temporary casing shall be removed (Figure 1.1b in APPENDIX A, located at the end of this chapter). (7-1-93)~~

b. Seals are required at depths greater than thirty-eight (38) feet in artesian wells or to seal through confining layers separating aquifers of differing pressure, temperature, or quality in any well. ( )

~~**c.:** In wells where the above described methods of sealing wells do not apply, special sealing procedures can be approved by the Director upon written request by the well driller. (7-1-93)~~

c. When a well is modified and the existing casing is moved or the original seal is damaged, or a well driller discovers that a seal was not installed or has been damaged, the well driller shall repair, replace, or install a seal around the permanent casing that is equal to or better than required when the well was originally constructed; ( )

d. Manufactured packers and shale traps may be used as devices to retain approved seal material when installing a required annular seal. Whenever these devices are used to retain seal material, the well driller shall comply with the manufacturer's recommendations for installation. ( )

e. If a temporary casing has been installed, upon completion of the drilling, the annular space shall be filled with approved seal material and kept full while withdrawing the temporary casing. Bentonite chips should be used with caution when the annular space between a temporary casing and permanent casing is filled with water. ( )

i. When attempts at removing a temporary casing are unsuccessful, the casing shall be sealed in place by a method approved by the department. The well driller shall notify the department whenever a temporary casing can not be removed and propose a plan to adequately seal the casing to prevent waste and contamination of the ground water. The plan shall detail how the casing will be sealed on the outside to a sufficient depth below land surface in addition to placement of any required formation seals through the interval at which the casing will remain. ( )

f. For mixed grout seals the minimum annular space required shall provide for a uniform seal thickness not less than one (1) inch on all sides of the casing or a borehole at least two (2) inches larger than the outside diameter of the casing to be sealed (Figure 02, Appendix A). (Note: a seven and seven-eighths (7 7/8) inch diameter (eight (8) inch nominal) borehole around a six and five-eighths (6 5/8) inch casing does not satisfy the minimum annular space requirements). When placing grout seals with a removable tremie pipe between casing strings or between a borehole and casing, the required annular space shall be at least one (1) inch or equal to the outside diameter of the tremie pipe whichever is greater. Permanent tremie pipes will be considered as a casing string and subject to minimum annular space requirements in addition to the annular space requirements around the well casing (Figure 03, Appendix A). All grout seals shall be placed from the bottom up, by using an approved method. Bentonite grout shall not be

used above the water table unless specifically designed and manufactured for such use and approved by the Director in advance. ( )

i. If cement-based grout (neat cement or neat cement grout) is used to create a seal, the casing string sealed shall not be moved or driven after the initial set. Construction shall not resume for a minimum of twenty four (24) hours following seal placement; ( )

g. For dry bentonite seals the minimum annular space required shall provide for a uniform seal thickness not less than one and five-eighths (1 5/8) inch on all sides of the casing or a borehole at least four (4) inches larger than the "nominal diameter" of the casing to be sealed. e.g., (six and five-eighths (6 5/8) inch casing (six (6) inches nominal) requires a ten (10) inch nominal temporary casing or a nine and seven-eighths (9 7/8) inch minimum borehole). Listed below are additional annular space requirements and limitations for placement of dry bentonite seals: ( )

i. All dry bentonite seals shall be tagged during placement and consider volumetric calculations to verify placement. ( )

ii. Installation of dry bentonite seals shall be consistent with the manufacturers' recommendations and specifications for application and placement. ( )

iii. Granular bentonite shall not be placed through water. ( )

iv. If a granular bentonite seal is placed deeper than two hundred (200) feet, the minimum annular space shall be increased by at least one (1) inch e.g., (six and five-eighths (6 5/8) inch casing (six (6) inches nominal) requires a twelve (12) inch nominal temporary casing or an eleven and seven eights (11 7/8) inch minimum borehole). ( )

v. Bentonite chips may be placed through water or drilling fluid of appropriate viscosity. Bentonite chip seals placed through more than fifty (50) feet of water or drilling fluid will require the minimum annular space to be increased by at least one (1) inch e.g., (six and five-eighths (6 5/8) inch casing (six (6) inches nominal) requires a twelve (12) inch nominal temporary casing or an eleven and seven eights (11 7/8) inch minimum borehole). ( )

08. Sealing of wells. Sealing requirements described herein are minimum standards that apply to all wells. The Director may establish alternate minimum sealing requirements in specific areas when it can be determined through detailed studies of the local hydrogeology that a specific alternate minimum will provide protection of the ground water from waste and contamination. ( )

~~d~~a. Consolidated formations. When a water well is drilled into and acquires water from an aquifer that ~~is overlain by~~consists of consolidated formations which are above the water table, ~~unperforated~~ casing shall be installed so that it extends and is sealed to a depth not less than thirty-eight (38) feet (Figure 04, Appendix A). If the well depth is less than thirty-eight (38) feet from land surface, well casing shall be installed and sealed five (5) feet into the consolidated formation or to a depth of eighteen (18) feet, whichever is greater. ~~. If necessary to complete the well, a smaller diameter casing, liner, or well screen may be installed below the unperforated~~

~~casing.~~ (~~7-1-93~~)

~~e~~b. Unconsolidated formations without ~~significant~~ confining layers of clay ~~beds~~. When a water well is drilled into and acquires water from an unconfined aquifer ~~which~~ that is overlain with unconsolidated formations, such as sand and gravel without ~~significant beds~~confining layers of clay, ~~an unperforated~~ well casing shall extend to at least five (5) feet below the water table and be sealed to a depth not less than thirty-eight (38) feet (Figure 05, Appendix A). If the well depth ~~water table~~ is ~~within~~less than thirty-eight (38)~~eighteen (18)~~ feet ~~of land surface, unperforated~~ well casing shall extend to at least five (5) feet below the water table or eighteen (18) feet, whichever is greater and be sealed to a depth of at least eighteen (18) feet.(~~7-1-93~~)

i. The extensive (e.g. one hundred fifty (150) feet thick or more) unconsolidated, non-stratified, sand and gravel of the Rathdrum Prairie are characterized by extremely high transmissivity and hydraulic conductivity. Under these conditions, sealing wells to depths greater than eighteen (18) feet may not be additionally protective. When a water well is drilled within the boundaries of the Rathdrum Prairie, shown in Figure 06, Appendix A of these Rules, well casing shall extend to at least five (5) feet below the water table and be sealed to a depth not less than eighteen (18) feet (Figure 07, Appendix A). ( )

~~f~~c. Unconsolidated formations with ~~Clay~~Confining ~~beds~~ layers of clay.~~in unconsolidated formations.~~ When a well is drilled ~~to develop~~into and acquires water from an aquifer that is overlain by unconsolidated deposits such as sand and gravel, and there are ~~significant interbeds~~confining layers of clay above the water table, ~~the~~ well casing ~~may~~shall be installed from the land surface to the confining layer immediately above and in contact with the production zone~~terminated~~ and sealed to a depth not less than thirty-eight (38) feet (Figure 08, Appendix A). If the well depth is less than thirty-eight (38) feet from land surface, well casing shall extend and be sealed into the first confining layer or to a depth of eighteen (18) feet, whichever is greater. ~~in a clay bed which will prevent the downward or upward movement of water. Unperforated casing shall extend to and be driven into the clay stratum overlying the water-bearing zone. A minimum of eighteen (18) feet of casing shall be installed below land surface. A single casing may extend from land surface to the water-bearing zone, or a smaller diameter casing, perforated liner, or well screen may be installed below the seal depth.~~( )~~(7-1-93)~~

09. Sealing Artesian Wells.

~~**04. Artesian Water**. When artesian water is encountered in the well, unperforated well casing shall extend into the confining stratum overlying the artesian zone The casing shall be sealed into the confining stratum to prevent surface and subsurface leakage from the artesian zone.~~

a. Unconsolidated Formations. When artesian water is encountered in unconsolidated formations, the production zone or open interval shall be limited to zones of like pressure, temperature, and quality. Water encountered in oxidized sediments shall not be comingled with water encountered in reduced sediments. Well casing shall extend from land surface into the lower most confining layer above the production zone, and shall be sealed; ( )

i. From land surface to a depth of at least thirty-eight (38) feet and; ( )

ii. Through all confining layer(s) and;

iii. A minimum of five (5) feet of seal material shall be placed into or through the lower most confining layer above the production zone (Figure 09, Appendix A); or ( )

iv. Five (5) ft into or through the lowermost confining layer above the production zone and continuously to land surface (Figure 09, Appendix A). ( )

v. If the well depth is less than thirty-eight (38) feet, the well shall be cased and sealed from land surface to the confining layer in direct contact with the production zone or to a depth of eighteen (18) feet, whichever is greater. ( )

b. Consolidated Formations. When artesian water is encountered in a consolidated formation, well casing shall be installed and sealed; ( )

i. From land surface to a depth of at least thirty-eight (38) feet and; ( )

ii. If the consolidated formation is overlain by a permeable formation(s) and water will rise above the consolidated formation, well casing shall extend and be sealed at least five (5) ft into the confining portion of the consolidated formation (Figure 10, Appendix A). ( )

iii. If the well depth is less than thirty-eight (38) feet, the well shall be cased and sealed from land surface five (5) feet into the confining consolidated formation or to a depth of eighteen (18) feet, whichever is greater. ( )

c. Pursuant to Section 42-1603, Idaho Code ~~I~~if the well flows at land surface, it shall be equipped with a control ~~valve~~device approved by the Director, so that the flow can be completely stopped. If leaks occur around the well casing or adjacent to the well, the well shall be completed with seals, ~~packers~~, casing or cement grout ~~that will~~to eliminate the leakage. Flowing artesian wells shall be equipped with an approved pressure gage fitting that will allow access for measurement of shut-in pressure of a flowing well. All pressure gage fittings shall include control valves such that the pressure gage can be removed without resulting in artesian flow from the well. The well driller shall not move his well drilling rig from the site until ~~this has been accomplished.~~all requirements have been satisfied. Some mixing of water may be ~~required~~ allowed to develop an adequate water well; however, the mixing shall be restricted to water zones of similar pressure, temperature and quality. ~~The Director may grant a waiver for good cause.~~ The driller shall take precautions to case and seal out zones which may lead to waste or contamination.(~~7-1-93~~)

~~**05. Artificial Gravel Pack Wells**. If a well is to be artificially gravel packed, the casing shall be sealed using one (1) of the two (2) following methods: (7-1-93)~~

~~**a.** Access pipes used to inject gravel must be installed in the annular space prior to sealing the space with cement grout or puddling clay. Care should be taken to insure that the seal is water tight around the injection pipe. The pipe must be equipped with a water-tight cap or~~

~~plug. The surface seal must extend a minimum of eighteen (18) feet below land surface. (See Figure 2.2a, APPENDIX B, (located at the end of this chapter).(7-1-93)~~

~~**b.** If a permanent surface or outer casing or liner is installed in the construction of a gravel filter packed well, a temporary surface casing at least two inches larger than the permanent casing shall be installed to the same depth as the permanent surface casinga minimum depth of eighteen (18) feet below land surface. Upon completion of the drilling, the annular space shall be filled with cement grout or puddling clay approved seal material and the temporary casing withdrawn. The space between the permanent outer casing and the liner or inner casing shall be covered with a water-tight seal. This seal shall be of metal welded to both casings in a manner that prevents the movement of surface water into this space and hence into the gravelfilter packed zone. An access pipe for injecting gravel filter pack material may be permanently installed. The seal must remain water tight and the pipe equipped with a water-tight cap or plug. (See Figure 2.2b, APPENDIX B, located at the end of this chapter). (7-1-93) (____)~~

~~**06. Driven Wells**. For all driven wells a well bore having a diameter of at least three (3) inches larger than the outside diameter of the casing shall extend at least three (3) feet below the land surface as outlined in sealing procedure Rule Subsection 025.03. The annular space around the drive pipe shall be filled with seal material and maintained in a slurry condition at all times during driving of the casing. (7-1-93)~~

~~**07. Dug Wells**. All dug wells greater than eighteen (18) feet in depth shall be constructed with a water tight surface curbing extending to a depth of at least eighteen (18) feet. The surface curbing and/or surface casing required shall be of concrete, concrete tile, or steel. Concrete pipe, if used, must meet or exceed ASTM C67-72T Class III specification. Cast in place concrete if used shall, at a minimum, be six (6) inches thick; however, the driller shall determine the wall thickness necessary to withstand external pressures which might cause the casing to collapse. Steel casing must, at a minimum, meet the specifications in Rule Subsection 025.01 and Table 1 of these standards. If precast concrete tile or steel casing is used for the surface casing, the well diameter to the bottom of the surface casing shall be two (2) inches greater than the outside diameter of the tile or steel. The annular space shall be filled with cement grout or puddling clay to a depth of at least eighteen (18) feet below the land surface. In a buried slab type well, the slab shall be at least eighteen (18) feet below the land surface. The slab shall be steel reinforced concrete at least four (4) inches in thickness. The seal between the casing and the slab shall be water tight. The well bore shall be backfilled with puddling clay or cement grout to the land surface. (See Figure 3, APPENDIX A, (located at the end of this chapter.) (7-1-93)~~

10. Alternative methods for sealing wells. To accommodate for new technology and in consideration of the wide variety of drilling equipment used to construct wells, other methods of sealing wells not specifically addressed in these rules may be allowed. The Director may consider specific proposals for alternative methods of sealing on a case by case basis. Director approval or acceptance of such procedures shall not constitute a “waiver” of any requirements of these rules. In such cases, the well driller shall provide sufficient information for the Director to determine that the full intent of the sealing requirements will be satisfied if an alternative method is employed. If it is determined that a specific alternate method will provide protection of the

ground water from waste and contamination, the Director may issue a statement of acceptance qualifying the use and implementation of such methods. ( )

~~08~~11 Injection Wells. In addition to meeting the requirements of ~~these standards~~ Rule 25, the construction, modification, and/or decommissioning (abandonment) of all injection wells over eighteen (18) feet in vertical depth shall ~~comply with the requirements of the injection well permit and the injection well rules.~~also comply with the IDAPA 37.03.03, "Rules for the Construction and Use of Injection Wells" and the injection well permit. Drillers shall obtain from the Director a certified copy of the permit authorizing construction or modification of an injection well before beginning work. ( )

~~09~~12 Cathodic Protection Wells. All cathodic protection wells shall be constructed by a licensed well driller in compliance with these rules. A detailed construction plan shall be included with the drilling permit application. ( )

~~10~~13 Monitoring Wells. All monitoring wells shall be constructed and maintained in a manner that will prevent waste or contamination and as otherwise required by these rules. When a monitoring well is no longer useful or needed, the owner or operator of the well shall decommission (abandon) the well in accordance with Rule 025.~~12~~16. No person may divert ground water from a monitoring well for any purpose not authorized by the Director. The application for a permit for all monitoring wells shall include a design proposal prepared by a licensed engineer or registered geologist pursuant to Section 42-235, Idaho Code. Blanket permits for monitoring well networks may be approved for site-specific monitoring and/or remediation programs. The designs and specification shall demonstrate that: ( )

a. The ground water resources are protected against waste and contamination; ( )

b. The remediation wells will inject or withdraw only fluids, gasses or solutions approved by the ~~Department~~Director; ( )

c. The remediation and monitoring wells will be constructed so as to prevent aquifer commingling; and ( )

d. The remediation and monitoring wells will be properly decommissioned (abandoned) upon project completion and in accordance with these rules. ( )

14. Closed Loop Heat Exchange Wells. The well driller shall construct closed loop heat exchange wells consistent with these rules. The well driller is not required to install steel casing in such wells. When constructing a closed loop heat exchange well, the well driller shall:( )

a. Construct each borehole of sufficient size to provide the annular space required by these Rules. ( )

b. Seal the annular space of each borehole with approved seal material in accordance with these rules; ( )

c. Install fluid-tight circulating pipe, composed of high-density polyethylene, grade PE3408, minimum cell classifications PE355434C or PE345434C conforming to ASTM Standard D3350, or other Director-approved pipe; ( )

d. Join pipe using thermal fusion techniques according to ASTM Standards D-3261 or D-2683. All personnel creating such system joints shall be trained in the appropriate thermal fusion technologies; ( )

e. Use only propylene glycol, or other circulating fluid approved by the Director;( )

f. Ensure that any other system additive is NSF approved and has prior approval from the Director; ( )

g. Pressure test each loop with potable water prior to grout installation; ( )

h. Pressure test the system with potable water prior to installation of the circulating fluid at 100% of the designed system operating pressure for a minimum duration of 24 hours; and ( )

i. Properly repair or decommission (abandon) all loops failing the test by pressure pumping approved seal material through the entire length of each failed loop. After grouting, loop ends shall be fused together or capped. ( )

~~11~~15. Access Port or Pressure Gage. Upon completion of a well and before removal of the well rig from the site, the well shall be equipped with an access port that will allow for measurement of the depth to water or an approved pressure gage fitting that will allow access for measurement of shut-in pressure of an artesian flowing well. All pressure gage fittings shall include control valves such that the pressure gage can be removed. Approved access ports are illustrated in ~~Figure 4~~Figure 11, APPENDIX ~~D~~A~~, (located at the end of this chapter)~~ together with approved locations for pressure gage fittings. Air lines are not a satisfactory substitution for an access port. Nonflowing domestic and stock water wells that are to be equipped with a sanitary seal with a built-in access port are exempt from this requirement. (~~7-1-93~~)

~~12~~16. Decommissioning (Abandoning) of Wells.

a. The well owner is charged with maintaining and properly decommissioning (abandoning) a well in a manner that will prevent waste and/or contamination of the ground water. No person shall decommission a well in Idaho without first obtaining a driller's license or receiving a waiver of the license requirement from the Director of the Department of Water Resources. Authorization is required from the Director prior to decommissioning any well. Upon decommissioning, the person who decommissioned the well shall submit to the Director a report describing the procedure.~~Permanently abandoned wells may have the casing removed or left in place and shall be filled with bentonite grout, cement grout, concrete, or puddling clay or other material as required to stop the upward or downward movement of water. If the well is artesian, cement grout, concrete or a packer approved by the Director shall be placed across the confining stratum overlying the artesian zone so as to prevent subsurface leakage from the artesian zone.~~

~~The remainder of the well shall be filled with cement grout, concrete, or other approved material.~~(~~7-1-93~~)

b. The Director may require ~~the abandonment~~decommissioning of a well in compliance with the provisions of these Rules ~~Rule Subsection 025.12.a~~ if the ~~condition of the~~ well does not meet minimum well construction standards, meets the definition of an unusable well, poses a threat to human health and safety, or is in violation of IDAPA 58.01.11, "Ground Water Quality Rule"; or if there is no valid water right or other authorization acceptable to the Director for use of the well. When required by the Director, decommissioning shall be done in accordance with the following: (~~7-1-93~~)

c. Cased wells and boreholes without a continuous seal from the top of the intakes or screen to the surface. The well driller shall use one (1) of the following methods as applicable:( )

i. The Director may require that well casing be perforated every five (5) feet from the bottom of the casing to within five (5) feet of the surface. Perforations made shall be adequate to allow the free flow of seal material into any voids outside the well casing. There shall be at least four equally spaced perforations per section circumference. Approved grout shall be pressure pumped to fill any voids outside of the casing. A sufficient volume shall be used to completely fill the well and annular space; or ( )

ii. Fill the borehole with approved seal material as the casing is being removed. ( )

d. Cased wells and boreholes with full-depth seals. If the well is cased and sealed from the top of the screen or production zone to the land surface, the well shall be completely filled with approved seal material. ( )

e. Uncased wells shall be completely filled with approved seal material. ( )

~~15~~**f.** **Dry Hole Wells**. Dry hole wells or wells from which the quantity of water to meet a beneficial use cannot be obtained shall be ~~backfilled~~ decommissioned with ~~cement grout, concrete or other~~ approved seal material in accordance with these rules. (~~7-1-93~~)

~~13~~**17.** **Completion of a Well**. The Director shall consider that every well is completed when the well drilling equipment has been removed, unless written notice has been given to the Director by the well driller that he intends to return and do additional work on the well within a specified period of time. Upon completion of the well, the well shall meet all of the required standards. (7-1-93)

a. Upon completion of drilling and prior to removal of well drilling equipment from a water well site, the top of the casing shall be completely covered with: ( )

i. A one fourth inch (1/4") thick solid, new or like-new steel plate with a three fourths inch (3/4) threaded and plugged access port, welded to and completely covering the casing (Figure 12, Appendix A) or ( )

ii. A threaded cap, or a commercially manufactured watertight sanitary well cap

(Figure 12, Appendix A) or ( )

iii. A commercially manufactured water-tight, snorkel-vented or non-vented well cap on any well susceptible to submergence or ( )

iv. A control device approved by the Director per Section 42-1603, Idaho Code on any well that flows at land surface (Figure 11, Appendix A). ( )

b. Upon the completion of every well, the well driller shall permanently affix the stainless steel well tag to the steel surface casing in a manner and location that maintains tag legibility. The well driller shall secure each tag by a full-length weld across the top and down each side of the tag, or by using one (1) stainless steel, closed-end domed rivet near each of the four (4) corners of the tag. Prior to welding or riveting, the tag shall be pre-shaped to fit the casing such that both sides to be welded or riveted touch the casing and no gaps exist between the tag and casing. For closed loop heat exchange wells, the well driller shall obtain Director approval for well tag placement and method of attachment. ( )

~~14~~18. Pitless Adapters. ~~The requirement of using seal material in the top eighteen (18) feet of the annular space around the well casing, as set forth in previous sections of these standards, may be altered when a pitless adaptor is installed; the well driller may, at his discretion, stop the well seal at a maximum of six (6) feet (seal from six (6) feet to eighteen (18) feet) below land surface.~~ When a pitless adaptor is used (Figure 12, Appendix A), the adaptor should be of the type approved by the National Sanitation Foundation (NSF) testing laboratory or the approval code adopted by the Pitless Adaptor Division of the Water Systems Council. The pitless adaptor, including the cap or cover, casing extension, and other attachments, must be so designed and constructed to be water tight and to prevent contamination of the potable water supply from external sources. If a permanent surface or outer casing is installed and is cut off or breached to install the pitless adapter on an inner well casing or liner, the space between the permanent outer casing and the liner or inner casing shall be sealed. The well owner or person installing the pitless adaptor shall then seal the excavation surrounding the pitless adaptor using ~~bentonite grout or other suitable~~an approved seal material. (~~7-1-93~~)

~~**15. Dry Hole Wells**. Dry hole wells shall be backfilled with cement grout, concrete or other approved material. (7-1-93)~~

19. Pump Installation. No person shall install a pump into any well that would cause a violation of ~~Rule 25~~applicable rules or state law. ( )

~~16~~20. Explosives. Explosives used in well construction shall never be detonated inside the required well casing. Approved explosive casing perforators may be exempted by the Director. (7-1-93)

~~17~~21. Hydraulic Fracturing. Hydraulic fracturing shall be performed only by well drillers licensed in Idaho. The pressure shall be transmitted through a drill string and shall not be transmitted to the well casing. The driller shall provide a report to the Director of the fracturing work which shall include well location, fracturing depth, fracturing pressures and other data as

requested by the ~~Department~~Director. (7-1-93)

~~18~~22. Drilling Fluids or Drilling Additives. ~~Drilling fluids or drilling additives shall not contain drilling fluids or drilling additives a concentration of any substance in excess of drinking water standards as set forth in the current IDAPA 58.01.08, "Rules for Public Drinking Water Systems." The driller shall be responsible for using drilling fluids and additives in accordance with the manufacturer's specifications. Specific products may be approved by the Director on a case-by-case basis.~~
The well driller shall use only potable water and drilling fluids or drilling additives that are manufactured for use in water wells, are National Sanitary Foundation (NSF), American Petroleum Institute (API), or ASTM/ANSI approved; and do not contain a concentration of any substance in excess of Primary Drinking Water Standards, as set forth in IDAPA 58.01.08, "Rules for Public Drinking Water Systems" according to manufacturer's specifications. The well driller may seek approval from the Director to use specific, non-certified products on a case-by-case basis. In addition, the well driller shall ensure the containment of all drilling fluids and materials used or produced to the immediate drilling site, and shall not dispose of such fluids or materials into any streams, canals, boreholes, wells, or other subsurface pathways.( )~~(7-1-93)~~

~~19~~23. Disinfection and ~~C~~Decontamination. ~~No casing, pipe, pumps, artificial gravel packs, drilling tools or other items shall be placed in a well which will cause contamination. Disinfection with a five hundred (500) parts per million chlorine solution (one (1) gallon of chlorine bleach per one hundred (100) gallons clean water) is recommended for all items placed in the well.~~ Upon completion of a well the driller shall be responsible for adding the appropriate amount of disinfecting chemical compound and distributing it throughout the well to achieve a uniform concentration for "in place" disinfection of the well. Chlorine compounds used in accordance with the table listed below will satisfy this requirement. Other methods may be used if approved by the Director in advance. ( )

	Amount of Chlorine Needed Per 100 Feet of Water in Well		
Casing Diameter (in.)	Gallons of water in casing per 100 ft. of water depth	Amount of 5.25% Sodium Hypochlorite (Unscented Laundry Bleach)	Amount of 65% Calcium Hypochlorite (Chlorine Granules)
6	147	2 ¼ cups	3 tbsp
8	261	4 cups	5 tbsp
10	408	6 ¼ cups	½ cup
12	588	9 cups	¾ cup
16	1044	1 gal	1 ¼ cup
Note: 1 gal = 4 qt = 8 pt = 16 cups; 1 cup = 16 tbsp			
Chlorine granules or tablets shall be dissolved and placed into the well as a solution.			
If another concentration of hypochlorite solution is used, the following equation should be used for calculating amounts. (Volume of water) X (0.08) = cups of hypochlorite % Hypochlorite (e.g. 50% = 50)			

( )~~(7-1-93)~~

24. Sand Production. The maximum sand content produced from a well after initial well develpoment shall not exceed 15 ppm. For the purpose of this rule, sand shall be considered as any sediment particle retained on a U.S. standard sieve #200 (0.075 mm to 2 mm). ( )

a. When necessary to mitigate sand production the well driller shall: ( )

i. Construct each well with properly sized casing, screen(s) or perforated intake(s) and, ( )

ii. Install properly sized filter pack(s) or, ( )

iii. Install pre-packed well screens or, ( )

iv. Employ other methods approved by the Director. ( )

b. The Director may grant a waiver exempting a well producing water that exceeds the maximum sand content only if the well driller has met the requirements of Rule 25.24.a.( )

c. Sand Production in Public Water System Wells**.** Wells used in connection with a public water system have more stringent requirements. See IDAPA 58.01.08, Idaho Rules for Public Water Systems. ( )

25. Well Development And Testing. For each well, the well driller shall measure and record the static (non-pumping) water level and the pumping water level, and the production rate. The production rate shall be determined by a pump, bailer, air-lift, or other industry approved test of sufficient duration to establish production from the well. For wells with no returns the driller shall report no returns and the static water level. This information shall be documented on the well driller's report. ( )

026. -- 029. (RESERVED).

030. CONSTRUCTION OF LOW TEMPERATURE GEOTHERMAL RESOURCE WELLS AND BONDING (RULE 30).

01. General. Drillers constructing low temperature geothermal resource wells (bottom hole temperature more than eighty-five (85) ~~Degrees F~~degrees Fahrenheit and less than two hundred twelve (212) ~~Degrees F~~degrees Fahrenheit) shall be qualified under the Well Driller Licensing Rules. All low temperature geothermal resource wells shall be constructed in such a manner that the resource will be protected from waste due to lost artesian pressure and temperature. The owner or well driller is required to provide bottom hole temperature data, but the Director may make the final determination of bottom hole temperature, based upon information available to him. (7-1-93)

a. All standards and guidelines for construction and decommissioning (abandonment) of cold water wells shall apply to low temperature geothermal resource wells except as modified by Rule ~~Subsections~~ 030.03, 030.04, and 030.06. (7-1-93)

b. A drilling prospectus shall be submitted to and approved by the Director prior to the construction, modification, deepening or decommissioning (abandonment) of any low temperature geothermal resource well. The well owner and the well driller are responsible for the prospectus and subsequent well construction. (7-1-93)

02. Well Owner Bonding. The owner of any low temperature geothermal resource well shall file a surety bond or cash bond as required by Section 42-233, Idaho Code, with the Director in an amount not less than five thousand dollars ($5,000) nor more than twenty thousand dollars ($20,000) payable to the Director prior to constructing, modifying or deepening the well after July 1, 1987. The bond amount shall be determined by the Director within the following guidelines. The bond shall be kept in force for one year following completion of the well or until released in writing by the Director, whichever occurs first. (7-1-93)

a. Any well less than three-hundred (300) feet deep with a bottom hole temperature of less than one hundred twenty (120) ~~Degrees F~~degrees Fahrenheit and a shut-in pressure of less than ten (10) pounds per square inch gage (psig) at land surface shall maintain a bond of five thousand dollars ($5,000). (7-1-93)

b. The owner of any well three hundred (300) feet to one thousand (1,000) feet deep with a bottom hole temperature of less than one hundred fifty (150) ~~Degrees F~~degrees Fahrenheit and a shut-in pressure of less than fifty (50) psig at land surface shall maintain a bond of ten thousand dollars ($10,000). (7-1-93)

c. The owner of any low temperature geothermal resource well not covered by Rules ~~Subsections~~ 030.02.a. and 030.02.b. shall maintain a bond of twenty thousand dollars ($20,000). (7-1-93)

d. The Director may decrease or increase the bonds required if it is shown to his satisfaction that well construction or other conditions merit an increase or decrease. (7-1-93)

e. The bond requirements of Section 42-233, Idaho Code, are applicable to wells authorized by water right permits or licenses having a priority date earlier than July 1, 1987, if the well authorized by the permit or license was not constructed prior to July 1, 1987 or if an existing well constructed within the terms of the permit or license is modified, deepened or enlarged on or after July 1, 1987. (7-1-93)

03. Casing. Low temperature geothermal resource wells shall be protected from cooling by preventing intermingling with cold water aquifers and from loss of pressure by preventing flow into zones of lower pressure. (7-1-93)

a. Casing which meets or exceeds the minimum specifications for permanent steel casing of Rule ~~Subsection~~ 0~~3~~25.~~02~~ 04 shall be installed in every well. The Director may require a more rigid standard for collapse and burst strength as depths or pressures may dictate. Every low temperature geothermal resource well which flows at land surface shall have a minimum of forty (40) feet of conductor pipe set and cemented its entire length. (7-1-93)

b. Casing shall be installed from twelve (12) inches above land surface into the overlying confining strata of the thermal aquifer. The casing schedule may consist of several different casing strings (i.e. conductor pipe, surface casing, intermediate casing, production ~~pipe~~casing) which may all extend to land surface or may be overlapped and sealed or packed to prevent fluid migration out of the casing at any depth (Figure 13, Appendix A). (7-1-93)

i. Low temperature geothermal resource wells less than one thousand (1,000) feet deep and which encounter a shut-in pressure of less than fifty (50) psig at land surface shall have two (2) strings of casing set and cemented to land surface. Conductor pipe shall be a minimum of forty (40) feet in length or ten percent (10%) of the total depth of the well whichever is greater. Surface casing shall extend into the confining stratum overlying the aquifer. (7-1-93)

ii. Low temperature geothermal resource wells one thousand (1,000) feet or more in depth or which will likely encounter a shut-in pressure of fifty (50) psig or more at land surface require prior approval of the drilling plan by the Director and shall have three strings of casing cemented their total length to land surface. Conductor pipe shall be a minimum length of forty (40) feet. Surface casing shall be a minimum of two hundred (200) feet in length or ten percent (10%) of the total depth of the well, whichever is greater. Intermediate casing shall extend into the confining stratum overlying the aquifer. (7-1-93)

c. Rule 030.13.b. may be waived if it can be demonstrated to the Director through the lithology, electrical logs, geophysical logs, injectivity tests or other data that formations encountered below the last casing string set, will neither accept nor yield fluids at anticipated pressure to the borehole. (7-1-93)

d. A nominal ~~bore hole~~borehole size of two (2) inches in diameter larger than the Outside Diameter (O.D.) of the casing or casing coupler (whichever is larger) shall be drilled. All casing designations shall be by O.D. and wall thickness and shall be shown to meet a given specification of the American Petroleum Institute, the American Society for Testing and Materials, the American Water Works Association or the American National Standards Institute. The last string of casing set during drilling operations shall, at the Director's option, be flanged and capable of mounting a valve or blow out prevention equipment to control flows at the surface before drilling resumes. (7-1-93)

04. Sealing of Casing. All casing shall be sealed its entire length with cement or a cement grout mixture unless waived by the Director. The seal material shall be placed from the bottom of the casing to land surface either through the casing or tubing or by use of a tremie pipe. The cement or cement grout shall be undisturbed for a minimum of twenty-four (24) hours or as needed to allow adequate curing. (7-1-93)

a. A caliper log may be run for determining the volume of cement to be placed with an additional twenty-five (25%) percent on site ready for mixing. If a caliper log is not run, an additional one hundred (100%) percent of the calculated volume of cement shall be on site ready for placement. (7-1-93)

b. If there is no return of cement or cement grout at the surface after circulating all of the cement mixture on site, the ~~Department~~Director will determine whether remedial work should be done to insure no migration of fluids around the well bore. (7-1-93)

c. The use of additives such as bentonite, accelerators, retarders, and lost circulation material shall follow manufacturer's specifications. (7-1-93)

05. Blow Out Prevention Equipment. The Director may require the installation of gate valves or annular blow out prevention equipment to prevent the uncontrolled blow out of drilling mud and geothermal fluid. (7-1-93)

06. Repair of Wells. The well driller shall submit a drilling prospectus to the Director for review and approval prior to the repair or modification of a low temperature geothermal resource well. (7-1-93)

07. Decommissioning (Abandoning) of Wells. Proper decommissioning (abandonment) of any low temperature geothermal resource well requires the following: (7-1-93)

a. All cement plugs shall be pumped into the hole through drill pipe or tubing. (~~7-1-93~~). ~~(See Figure 5, APPENDIX E, (located at the end of this chapter).~~

b. All open annuli shall be completely filled with cement. (7-1-93)

c. A cement plug at least one hundred (100) feet in vertical depth shall be placed straddling (fifty (50) feet above and fifty (50) feet below) the zone where the casing or well bore meets the upper boundary of each ground water aquifer. (7-1-93)

d. A minimum of one hundred (100) feet of cement shall be placed straddling each drive shoe or guide shoe on all casing including the bottom of the conductor pipe. (7-1-93)

e. A surface plug of either cement grout or concrete shall be placed from at least fifty (50) feet below the top of the casing to the top of the casing. (7-1-93)

f. A cement plug shall extend at least fifty (50) feet above and fifty (50) feet below the top of any liner installed in the well. The Director may waive this rule upon a showing of good cause. (7-1-93)

g. Other decommissioning (abandonment) procedures may be approved by the Director if the owner or operator can demonstrate that the low temperature geothermal resource, ground waters, and other natural resources will be protected. (7-1-93)

h. Approval for decommissioning (abandonment) of any low temperature geothermal well must be in writing by the Director prior to the beginning of any decommissioning (abandonment) procedures. (7-1-93)

031. -- 034. (RESERVED)

035. HEALTH STANDARDS (RULE 35).

01. Public Water System Wells~~Supply~~. All wells that are constructed for public supply of domestic water shall, in addition to meeting these standards, meet all of the requirements set forth by the Idaho Department of Environmental Quality Rules, IDAPA 58.01.08, "Idaho Rules For Public Drinking Water Systems." (~~7-1-93~~)

02. Special Standards for Construction of Wells When Mineralized or Contaminated Water Is Encountered. Any time in the construction of a well that mineralized or contaminated water is encountered, the well driller shall take the appropriate steps necessary to prevent the poor quality waters from entering the well or moving up or down the annular space around the well casing. The method employed to case and seal out this water shall be determined by the well driller, provided ~~the~~ all other minimum standards are met. The well driller will take ~~S~~special precautions ~~must be taken~~ in the case of ~~gravel~~filter-packed wells to prevent water of inferior quality from moving vertically in the ~~gravel~~filter packed portions of the well. All actions taken will be clearly documented on the well driller's report (~~7-1-93~~)

03. Distances From Contaminante Sources. All water wells constructed for domestic use shall comply with minimum distances from septic tanks, drain fields, drainfield replacement area and other siting requirements of the Idaho Department of Environmental Quality and the appropriate District Health Department. (7-1-93)

04. ~~Well Maintenance~~Owners Responsibilities For Well Use And Maintenance After a well is complete ~~T~~the well owner shall be responsible for water quality testing, properly maintaining the well and reporting problems with a well to the Director. All wells shall be capped, covered and sealed such that debris cannot enter the well, persons or animals cannot fall into the well, and water cannot enter the well around the outside of the casing. Pursuant to Section 42-1603, Idaho Code, the owner of any artesian well that will flow at land surface is required to apply to the Director for approval of a flow control device. (~~7-1-93~~)

05. Use. The well owner shall not operate any well in a manner that causes waste or contamination of the ground water resource. Failure to operate, maintain, knowingly allow the construction of any well in a manner that violates these Rules, or failure to repair or properly decommission (abandon) any well as herein required will subject the well owner to civil penalties as provided by statute. ( )

06. Maintenance. The well owner shall:

a. Not allow modification to wells under their control without first obtaining an approved IDWR permit, pursuant to Section 42-235, Idaho Code; ( )

b. Maintain the minimum casing height of twelve (12) inches above land surface and finished grade; ( )

c. Maintain the appropriate well cap, and control device if required, according to these Rules; ( )

d. Not install or allow the installation of any well pump that would cause a violation of the sand production requirements in accordance with these Rules or allow the well to pump in excess of that allowed by a valid water right or domestic exemption; ( )

e. Any person owning or controlling a well shall maintain the well to prevent waste or contamination of ground waters through leaky casings, pipes, fittings, valves, pumps, seals or through leakage around the outside of the casings, whether the leakage is above or below the land surface. Any person owning or controlling a non-compliant well shall have the well repaired by a licensed well driller under a permit issued by the Director in accordance with these Rules. ( )

07. New Construction. Not construct or allow construction of any permanent building, except for buildings to house a well and/or plumbing apparatus, closer than ten (10) feet from an existing well. ( )

08. Maintain All Other Separation Distances. Not construct or install, or allow the construction or installation of any object listed in a location closer than that allowed by the table of Rule 25.01.e. ( )

09. Unusable Wells. The Well Owner shall have any unusable well repaired or decommissioned (abandoned) by a licensed well driller under a permit issued by the Director in accordance with these Rules. ( )

10. Wells Posing a Threat to Human Health and Safety or Causing Contamination of the Ground Water Resource. The Well Owner shall have any well shown to pose a threat to human health and safety or cause contamination of the ground water resource immediately repaired or decommissioned (abandoned) by a licensed well driller under a permit issued by the Director repair in accordance with these Rules. ( )

036. -- 039. (RESERVED)

040. AREAS OF DRILLING CONCERN (RULE 40).

01. General. (7-1-93)

a. The Director may designate an "area of drilling concern" to protect public health, or to prevent waste and contamination of ground and/or surface water because of factors such as aquifer pressure, vertical depth to the aquifer, warm or hot ground water, or contaminated ground or surface waters. (7-1-93)

b. The designation of an area of drilling concern does not supersede or preclude designation of part or all of an area as a Critical Ground Water Area (Section 42-233a, Idaho Code), Ground Water Management Area (Section 42-233b, Idaho Code), or Geothermal

Resource Area (Sections 42-4002 and 42-4003, Idaho Code). (7-1-93)

c. The designation of an area of drilling concern can include certain aquifers or portions thereof while excluding others. The area of drilling concern may include low temperature geothermal resources while not including the shallower cold ground water systems. (7-1-93)

02. Bond Requirement. (7-1-93)

a. The minimum bond to be filed by the well driller with the Director for the construction or modification of any well in an area of drilling concern shall be ten thousand dollars ($10,000) unless it can be shown to the satisfaction of the Director that a smaller bond is sufficient. (7-1-93)

b. The Director may determine on a case-by-case basis if a larger bond is required based on the estimated cost to repair, complete or properly decommission (abandon) a well.(~~7-1-93~~____)

03. Additional Requirements. (7-1-93)

a. A driller shall demonstrate to the satisfaction of the Director that he has the experience and knowledge to adequately construct or decommission (abandon) a well which encounters warm water or pressurized aquifers. (~~7-1-93~~____)

b. A driller shall demonstrate to the satisfaction of the Director that he has, or has immediate access to, specialized equipment or resources needed to adequately construct or decommission (abandon) a well. (~~7-1-93~~____)

041. -- 044. (RESERVED)

045. DRILLING PERMIT REQUIREMENTS (RULE 45).

01. General Provisions. (~~7-1-93~~____)

a. ~~The owner of a well to be constructed, drilled, deepened or enlarged on or after July 1, 1987 shall obtain a drilling permit from the Director prior to construction or drilling of the well.~~Drilling permits are required pursuant to Section 42-235, Idaho Code, prior to construction of any well. (~~7-1-93~~____)

~~**b.** The owner of a well under construction prior to July 1, 1987, for which the drilling equipment is at the site and construction is ongoing, shall not be required to obtain a drilling permit, provided that construction of the well was complete by August 1, 1987. The Director may extend the date for good cause. (7-1-93)~~

~~**c.** The Director may issue a drilling permit to the owner of a proposed well, to the driller employed to construct the well, or to the owner's representative. (7-1-93)~~

~~**d**~~**b.** Drilling permits will not be issued for construction of a well which requires

another separate approval from the department~~,~~ such as a water right permit, transfer, amendment or injection well permit, until the other separate permitting requirements have been satisfied.~~approval has been given by the department. The Director may grant a waiver if he determines that the public interest will be served by an expedited approval.~~ (~~7-1-93~~____)

~~e~~c. The Director may allow the use of a start card permit or give verbal approval to a well driller for the construction of ~~certain wells such as~~ cold water single family domestic wells. ~~and stockwater wells which do not require other separate approvals from the department, provided the driller files the drilling permit and appropriate fee with the Director within thirty (30) days of the verbal approval~~ Start cards must be received by the Department at least two office hours prior to commencing construction of the well. (~~7-1-93~~____)

~~f~~d. The Director may give verbal approval to a well driller for the construction of a well for which other permitting requirements have been met, provided that the driller or owner has filed ~~files~~ the drilling permit application and appropriate fee. ~~with the Director within thirty (30) days of the verbal approval.~~ (~~7-1-93~~____)

~~g.~~e The Director will not give a verbal approval or allow the use of a start card permit for wells ~~construction~~ constructed ~~or drilling~~ in a designated ~~area~~ Area of ~~drilling~~ Drilling ~~concern~~Concern, Critical Ground Water Area, or Ground Water Management Area. (~~7-1-93~~____)

~~**h.** Failure of the driller to submit a completed drilling permit and fee within the thirty (30) day period after receiving verbal approval to construct a well is cause for the Director to seek the penalties provided by statute and by these Rules. (7-1-93)~~

~~i~~f. ~~After the effective date of these Rules, a~~A well driller shall not construct, drill or modify any well until a drilling permit has been issued, or verbal approval granted~~is given~~.(~~7-1-93~~____)

02. Effect of a Permit. (7-1-93)

a. A drilling permit authorizes the construction~~, drilling~~ or modification of a well in compliance with these Rules and the conditions of approval on the permit. (~~7-1-93~~____)

b. A drilling permit does not constitute a water right ~~permit~~, injection well permit or other authorization which may be required, ~~from the department prior to actual well construction and does not~~ ~~authorize~~ authorizing use of water from ~~the~~ a well or discharge of fluids into ~~the~~ a well. (~~7-1-93~~____)

c. A drilling permit may not be assigned from one owner to another or from one driller to another. (~~7-1-93~~____)

d. A drilling permit authorizes the construction of one (1) well ~~(~~except for ~~group~~blanket monitoring well drilling permits.~~) unless other holes started under terms of the permit are properly abandoned and the department is advised of the abandonment.~~(~~7-1-93~~____)

03. Exclusions. ~~(7-1-93)~~

~~**a.** Geotechnical borings for the purpose of mineral exploration or for the design of foundations for structures or for the design of dams and embankments~~ Artificial openings and excavations that do not constitute a well for the purposes of these Rules and are not subject to the drilling permit requirements~~ but~~ shall be modified, constructed, ~~and~~ or decommissioned (abandoned) in accordance with minimum well construction standards. The Director may require decommissioning (abandonment) of artificial openings and excavations constructed pursuant to Rule 045.03 in compliance with these rules when the use ceases or if the holes may contribute to waste or contamination of the ground water. The following are types of artificial openings and excavations not considered wells: ~~(7-1-93)~~ ( )

a. Artificial openings and excavations with total depth less than eighteen (18) feet.( )

~~**b.** The Director may require abandonment of wells constructed pursuant to Rule 045.03.a. if the wells are determined to cause waste or contamination of the ground water. (7-1-93)~~

b. Artificial openings and excavations for collecting soil or rock samples, determining geologic properties, or mineral exploration or extraction, including gravel pits.( )

~~**c.** Wells constructed pursuant to Rule Subsection 045.03.a. shall be abandoned in compliance with adopted rules when use of the wells cease. (7-1-93)~~

c. Artificial openings and excavations for oil and gas exploration for which a permit has been issued pursuant to Section 47-320, Idaho Code. ( )

d. Artificial openings and excavations constructed for de-watering building or dam foundation excavations. ( )

04. Converting an Artificial Openings or Excavations Not Constructed as a Well for Use as a Well. An artificial openings and excavations that was not constructed as a well pursuant to a drilling permit, if subsequently converted to obtain water, monitor water quantity or quality, or to dispose of water or other fluids, shall be reconstructed by a licensed driller in compliance with well construction standards and drilling permit requirements. ( )

~~04~~05. Fees. ~~(7-1-93)~~ ( )

~~**a.** A drilling permit fee is not required for a well constructed and completed prior to July 1, 1987, provided the well is not deepened or the dimensions of the well are not increased on or after July 1, 1987.o (7-1-93)~~

~~b~~a. ~~The drilling permit fee for construction of a well for a single family domestic use, stockwater use, class V(c) heat pump injection associated with a single family domestic use or monitoring use or for any use with a rate of diversion of four one hundreths (0.04) cubic feet per second or less and for the storage of four (4) acre-feet per year or less shall be ten ($10) dollars. (See IDAPA 37.03.03, "Rules for Construction and Use of Injection Wells" for the description of class V(c) injection wells).~~Drilling permit fees shall be as prescribed by Section 42-235, Idaho Code. ~~(7-1-93)~~ ( )

~~**c.** The Director may issue a blanket drilling permit for site specific monitoring~~

~~programs prepared by a licensed engineer or licensed geologist as provided in Section 42-235, Idaho Code, upon submittal of a fifty dollar ($50) fee. (7-1-93)~~

~~**d.** The drilling permit fee for well uses which are not included in Rules Subsections 045.04.b. and 045.04.c. shall be one hundred dollars ($100). (7-1-93)~~

~~e~~b. The difference between the drilling permit fee required by ~~Rules Subsections 045.04.b. through 045.04.d.,~~Section 42-235 Idaho Code as applicable, shall be paid when an existing well constructed on or after July 1, 1987, for which the lower drilling permit fee was paid, is authorized by the ~~Department~~Director for a use which would require the larger drilling permit fee. ~~This rule applies even though the existing well is not deepened or the dimensions of the well are not increased.~~ (~~7-1-93~~____)

~~**f.** A drilling permit fee will not be required for a new or additional use from an existing well constructed on or after July 1, 1987, when the drilling permit fee for the new or additional use is the same amount which was previously paid for construction of the well in connection with the existing use. (7-1-93)~~

046. -- 049. (RESERVED)

050. PENALTIES (RULE 50).

A person owning or controlling a well that allows waste or contamination of the state's ground water resources or causes a well ~~not~~ to meet ~~the construction standards provided in these~~ a lesser standard than required by these ~~rule~~Rules, is subject to the civil penalties as provided by statute. A driller who violates the foregoing provisions of these ~~minimum~~ well construction standards ~~rule~~Rules is subject to enforcement action and the ~~penalty~~ penalties ~~provisions specified in 42-238 and 42-238b, Idaho Code~~as provided by Statute. (~~7-1-93~~____)

051. -- 999. (RESERVED)

APPENDIX A

Figure 01. Concrete Slabs and Finished Grade. 1

Figure 02. Annular Space and Overbore. 2

Figure 03. Overbore Requirements When a Tremie Pipe is Left in Place and A Grout Seal Installed..... 3

Figure 04. Sealing Requirements in Consolidated Formations. 4

Figure 05. Sealing Requirements in Unconsolidated Formation without Confining Layers. 5

Figure 06. Rathdrum Prairie Boundary. 6

Figure 07. Sealing Requirements in the Rathdrum Prairie..... 7

Figure 08. Sealing Requirements in Unconsolidated Formations with Confining Layers. 8

Figure 09. Sealing Requirements for Artesian Wells in Unconsolidated Formations. 9

Figure 10. Sealing Requirements for Artesian Wells in Consolidated Formations. 10

Figure 11. Access Ports, Pressure Gauges, and Control Valves. 11

Figure 12. Well Cap and Access Port. 12

Figure 13. Casing Segments for Low Temperature Geothermal Wells. 13

Figure 01. Concrete Slabs and Finished Grade.

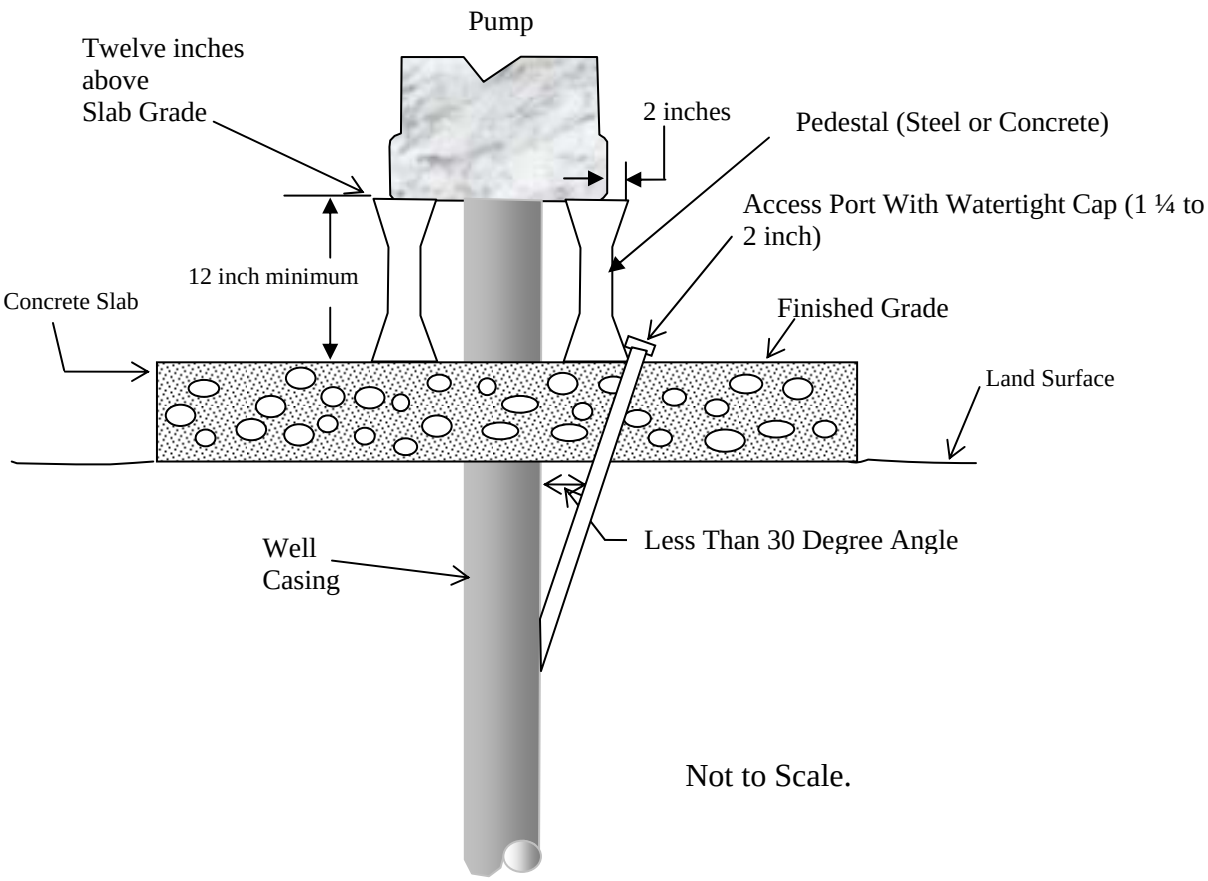

Note. Pedestal shall not extend more than two (2) inches past pump base in horizontal direction.

Figure 02. Annular Space and Overbore.

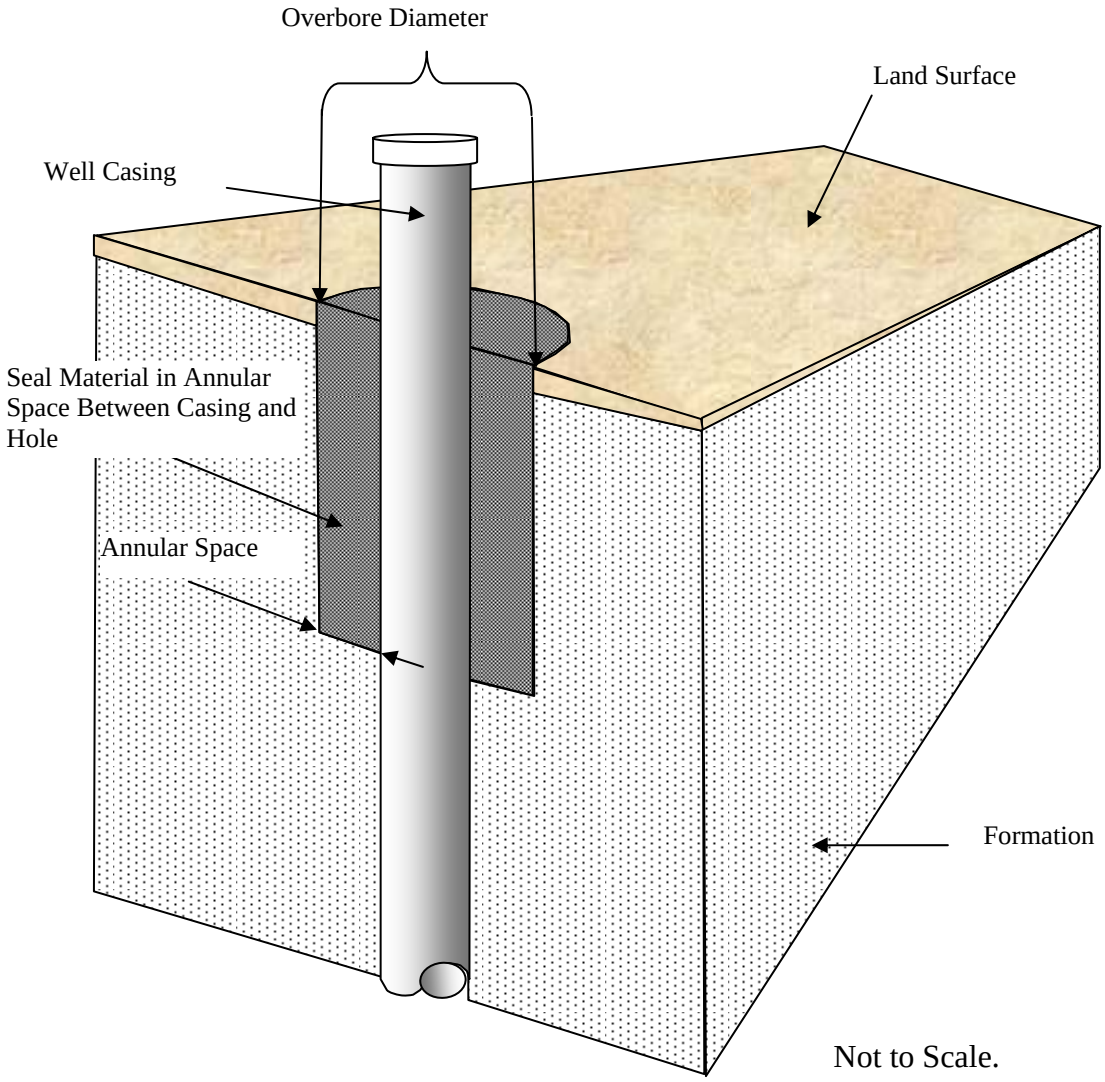

Figure 03. Overbore Requirements When a Tremie Pipe is Left in Place and A Grout Seal Installed.

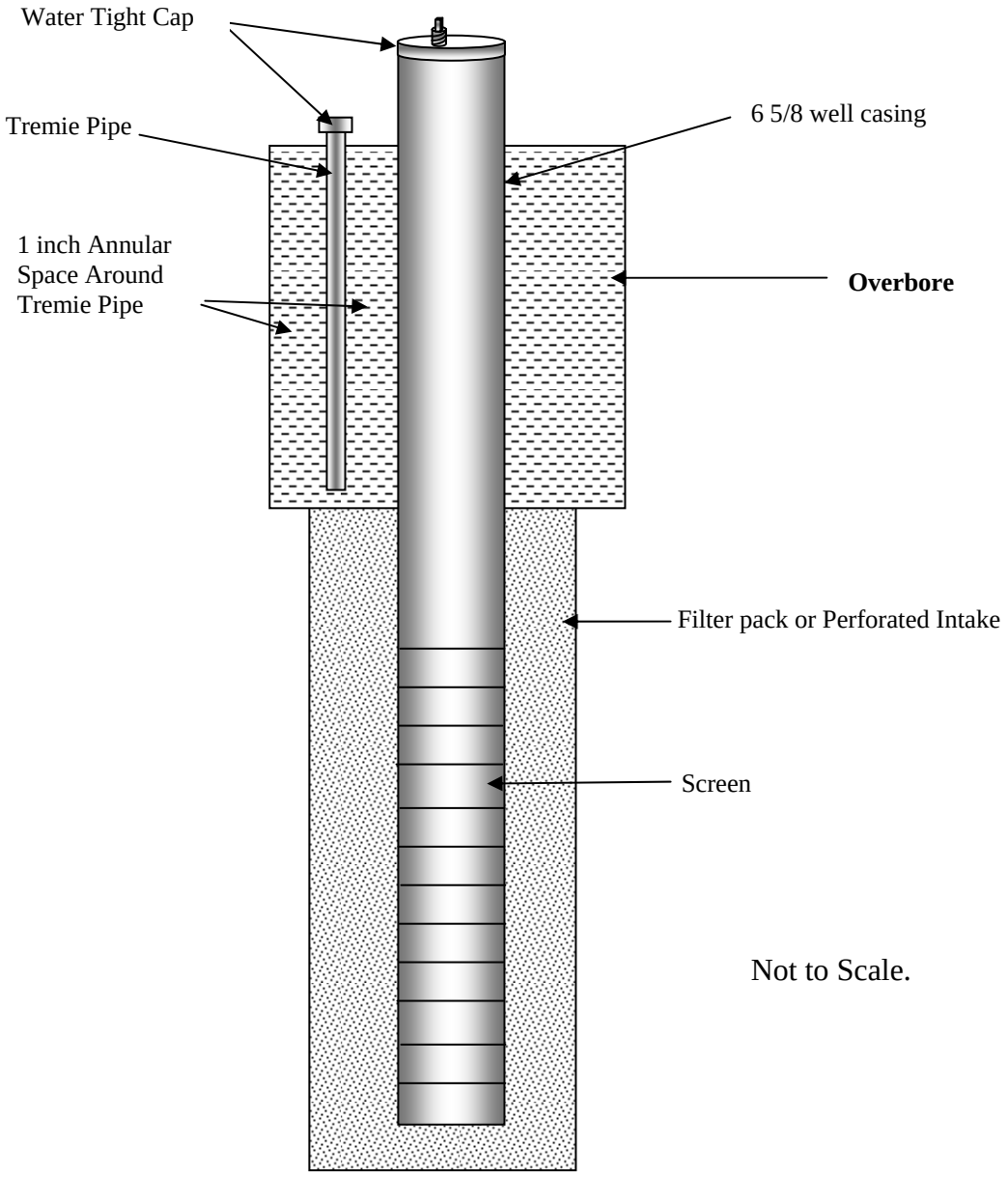

Figure 04. Sealing Requirements in Consolidated Formations.

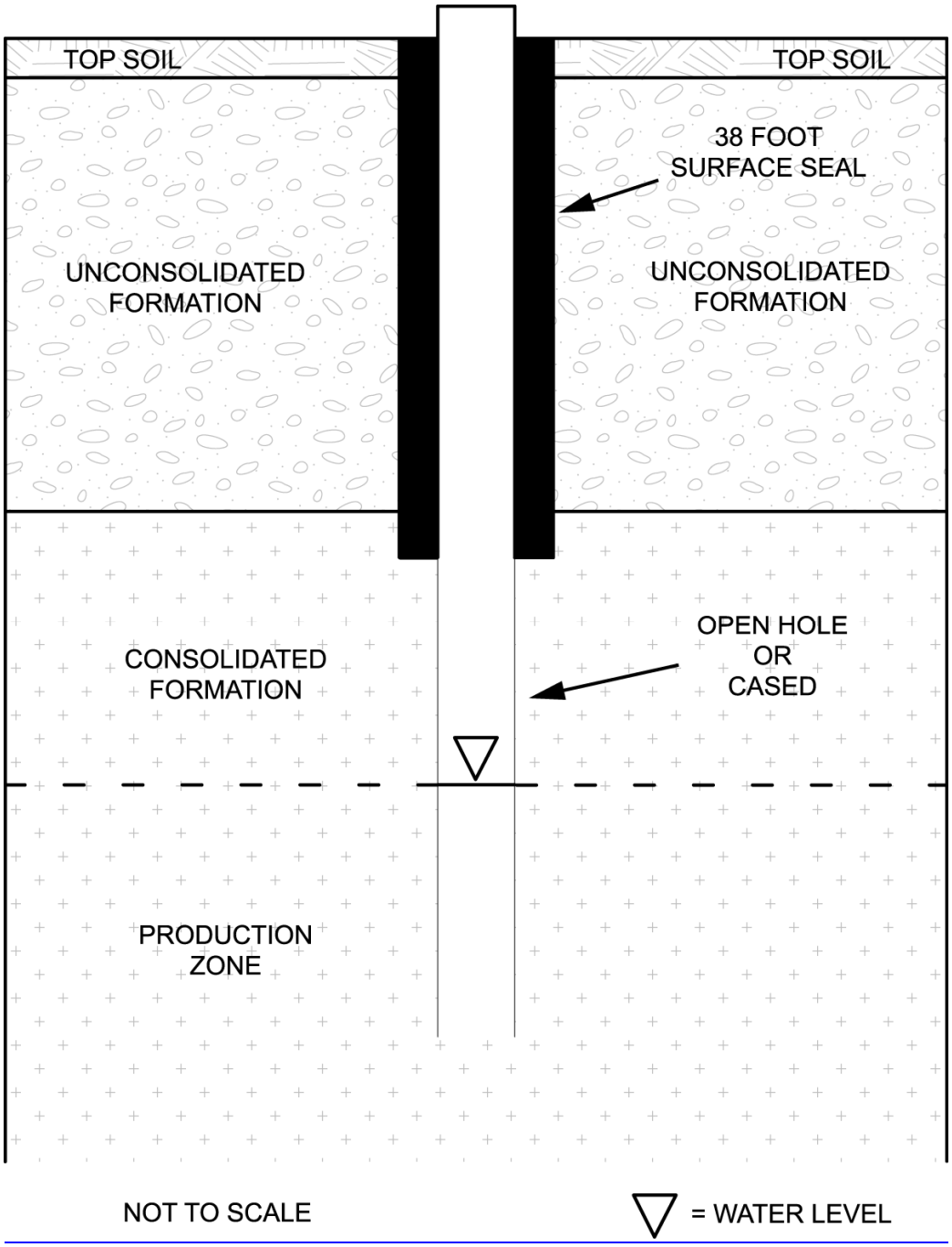

Figure 05. Sealing Requirements in Unconsolidated Formation without Confining Layers.

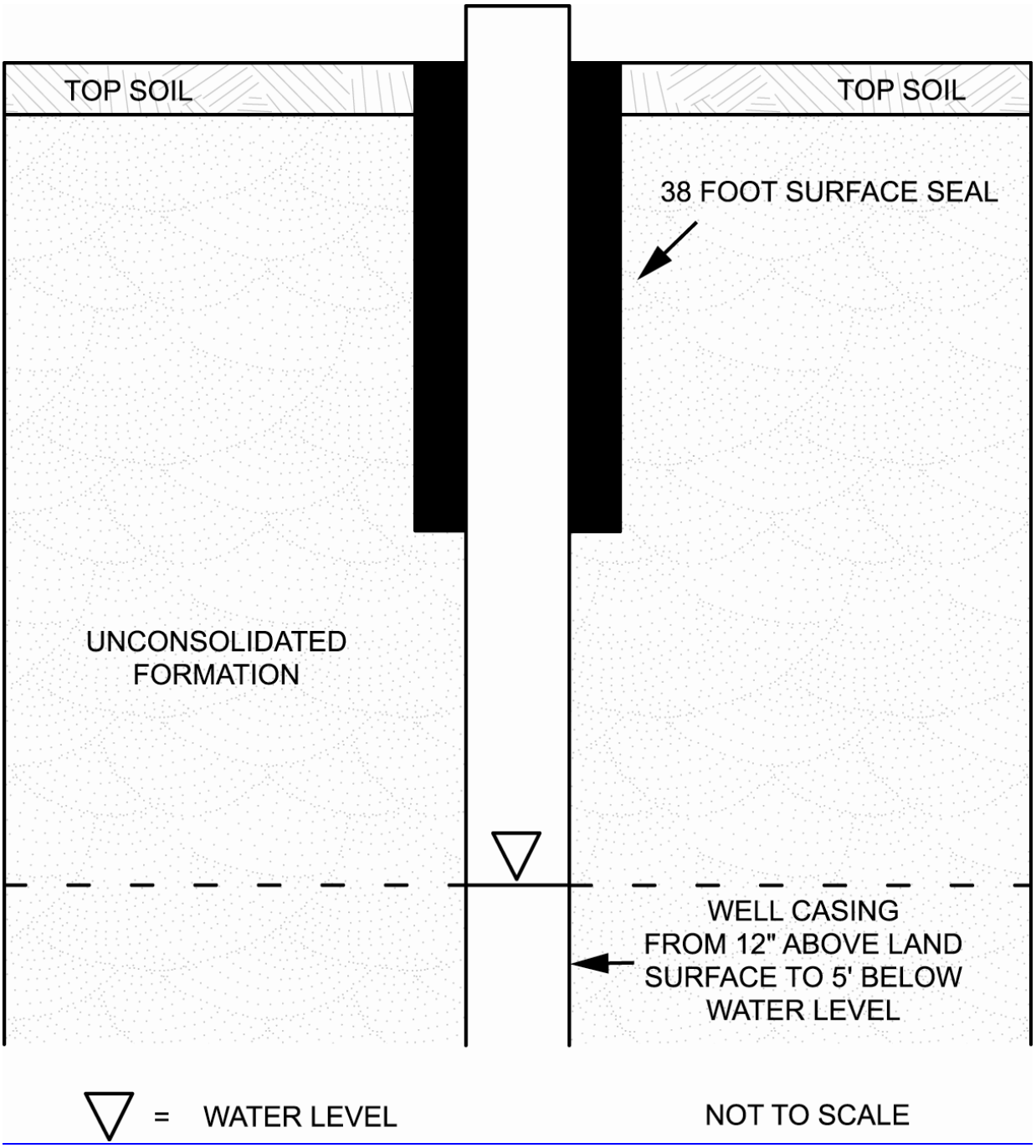

Figure 06. Rathdrum Prairie Boundary.
(Also See Figure 7).

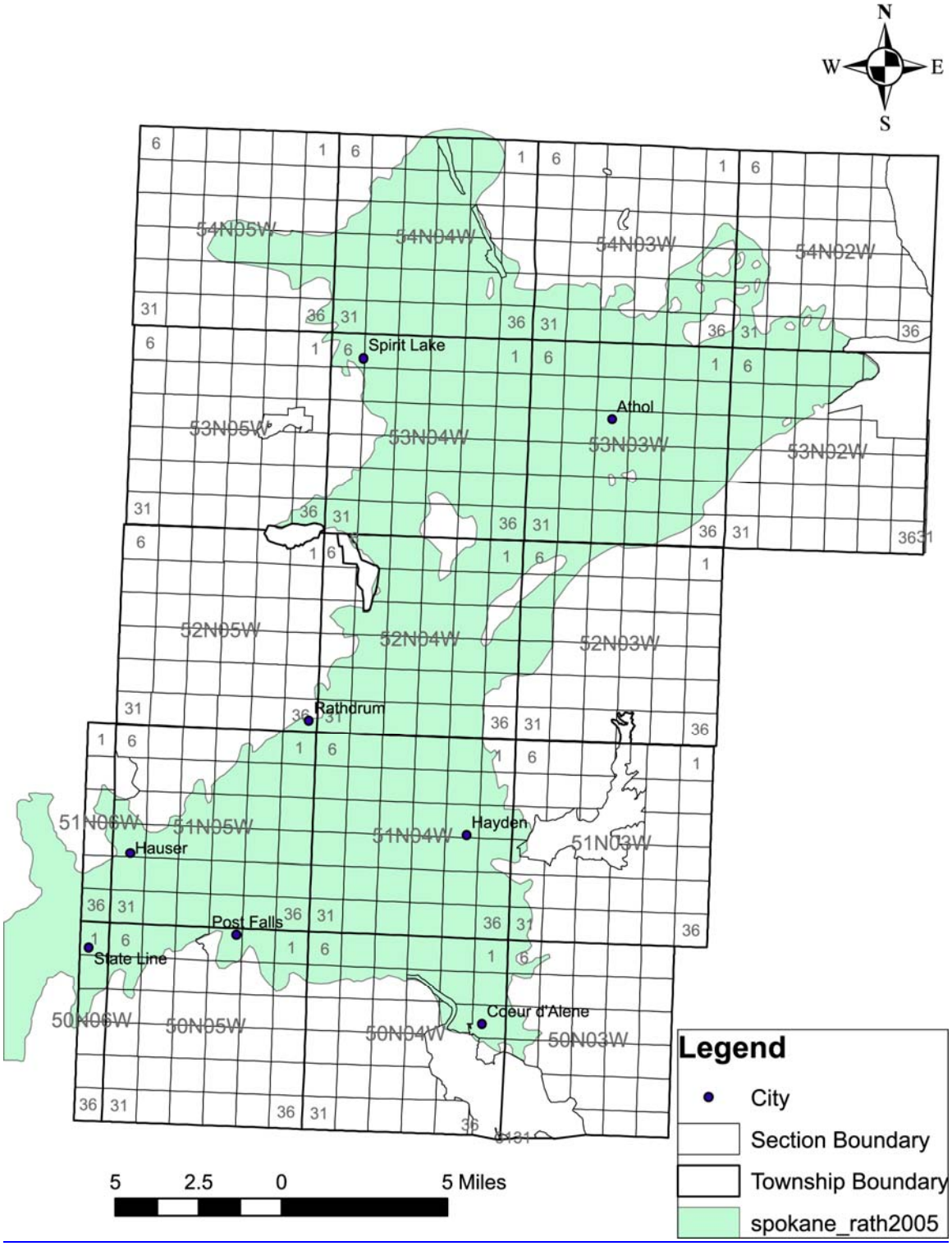

Figure 07. Sealing Requirements in the Rathdrum Prairie.
(Also See Figure 6).

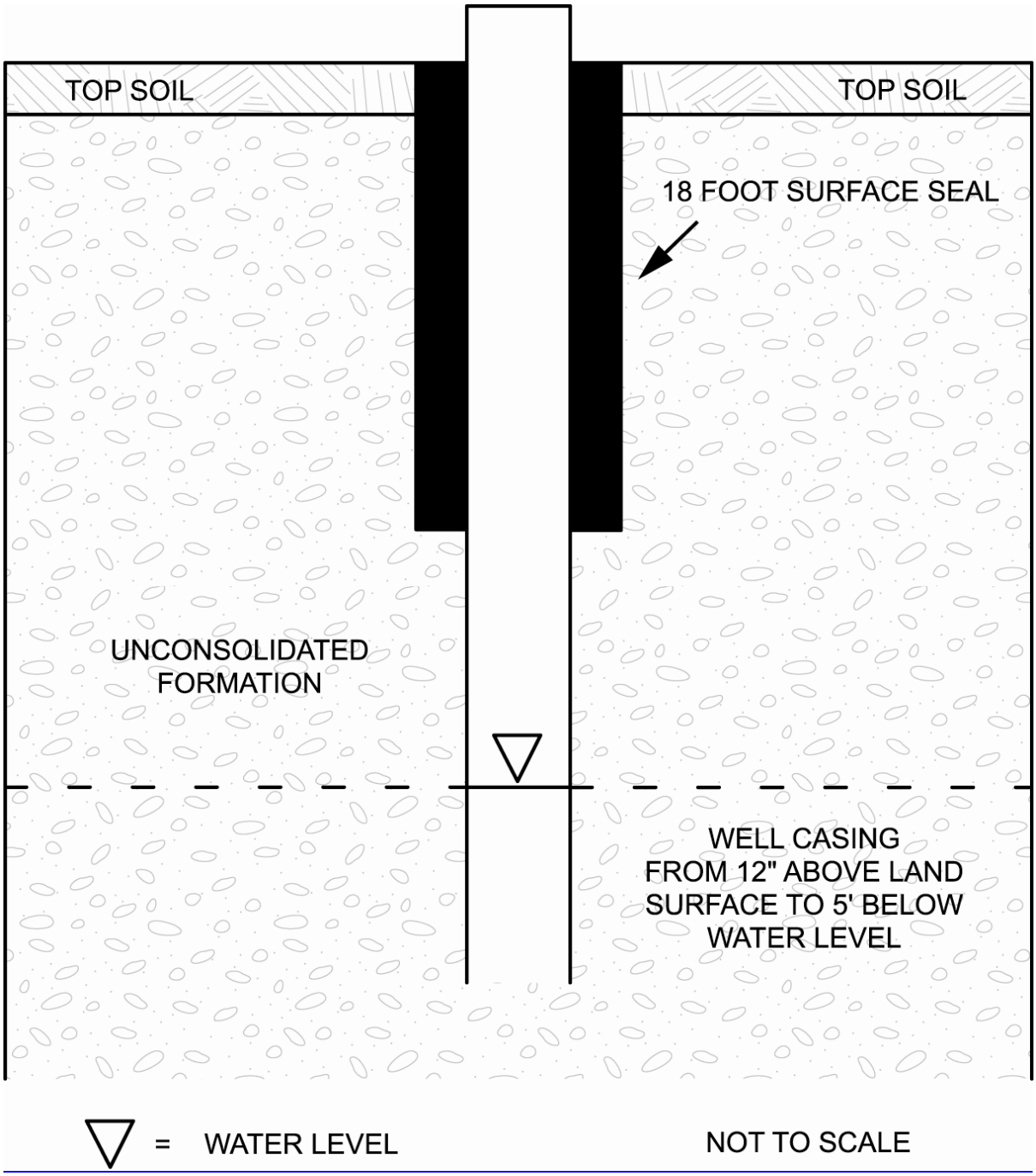

Figure 08. Sealing Requirements in Unconsolidated Formations with Confining Layers.

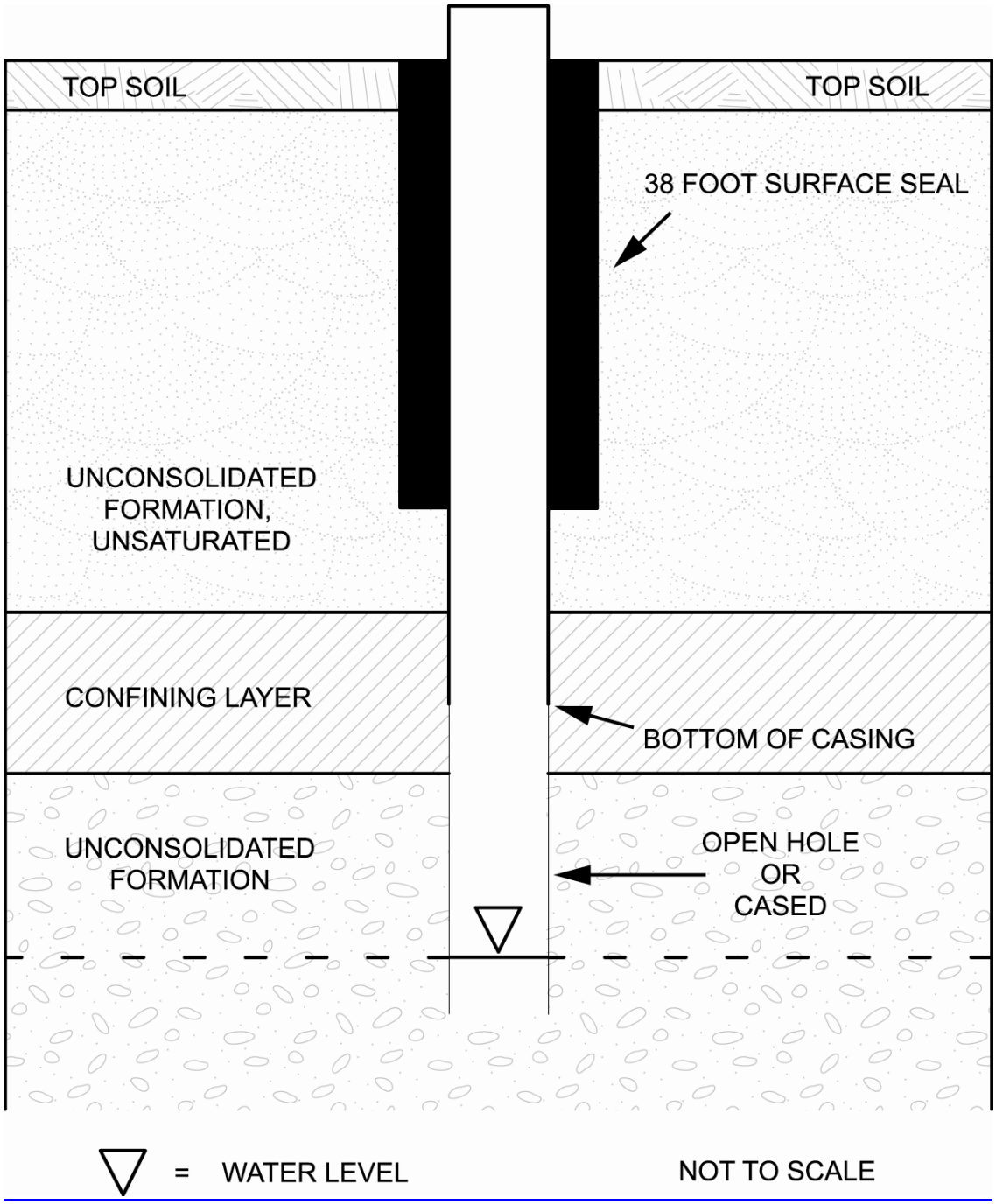

Figure 09. Sealing Requirements for Artesian Wells in Unconsolidated Formations.

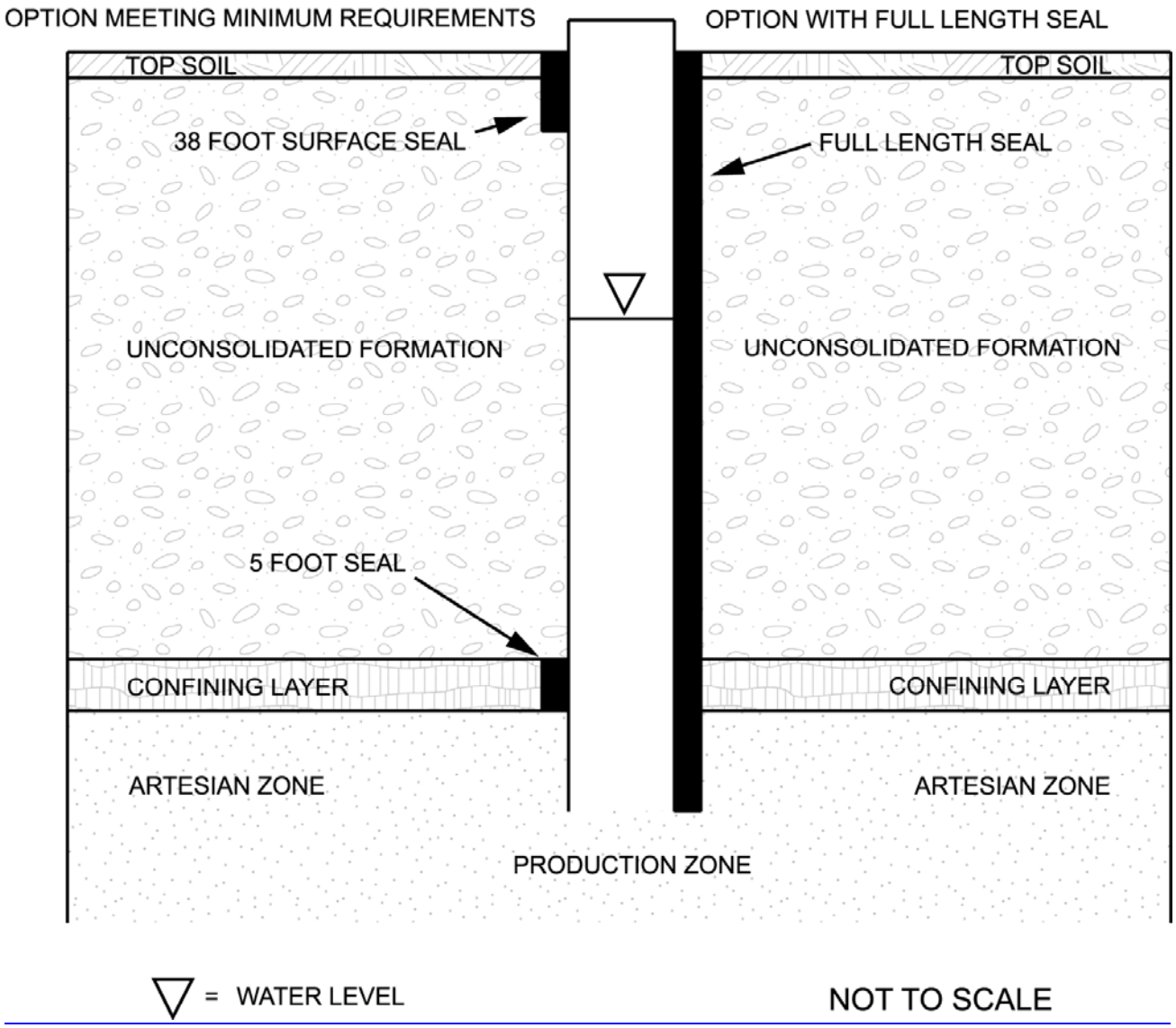

Figure 10. Sealing Requirements for Artesian Wells in Consolidated Formations.

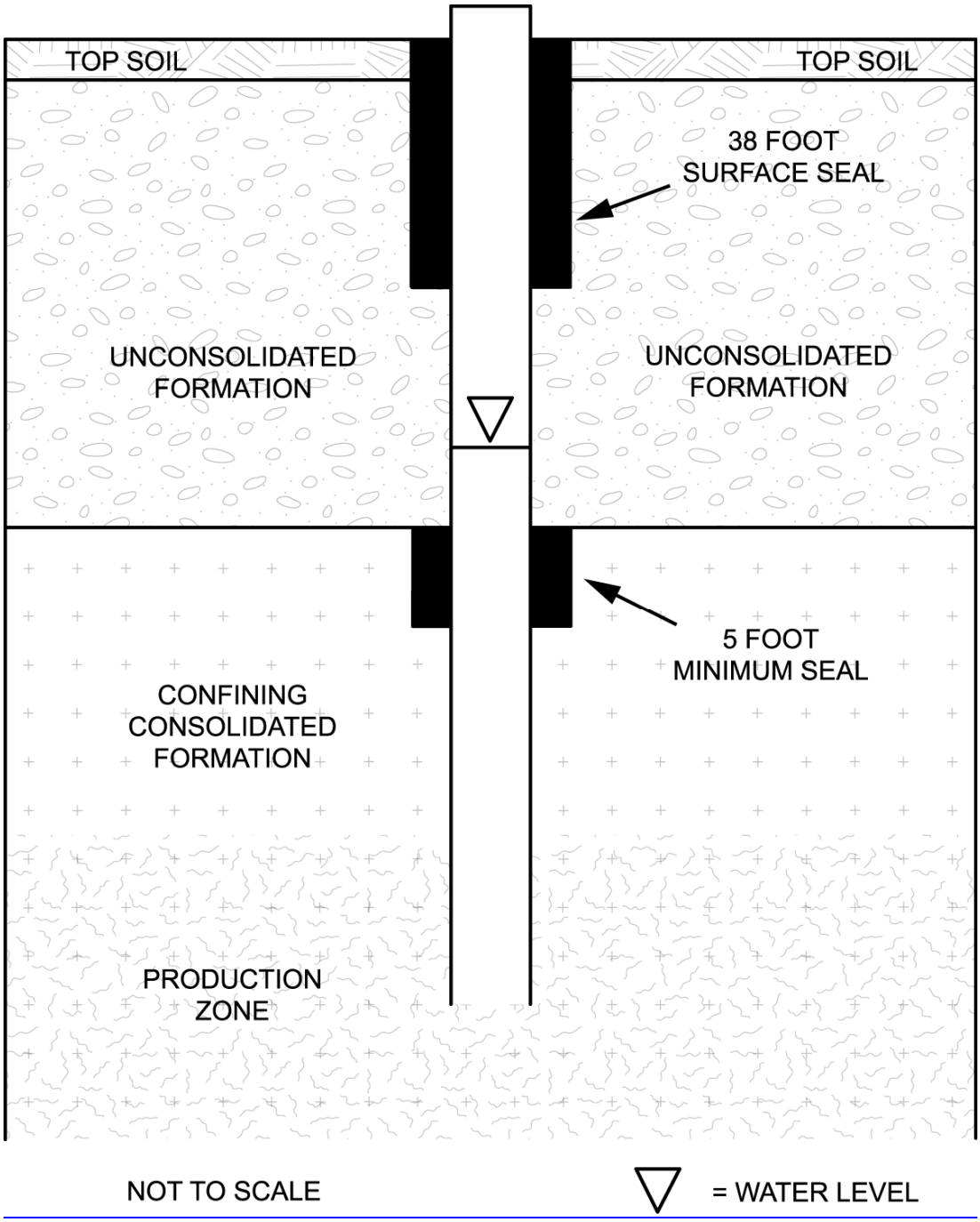

Figure 11. Access Ports, Pressure Gauges, and Control Valves.

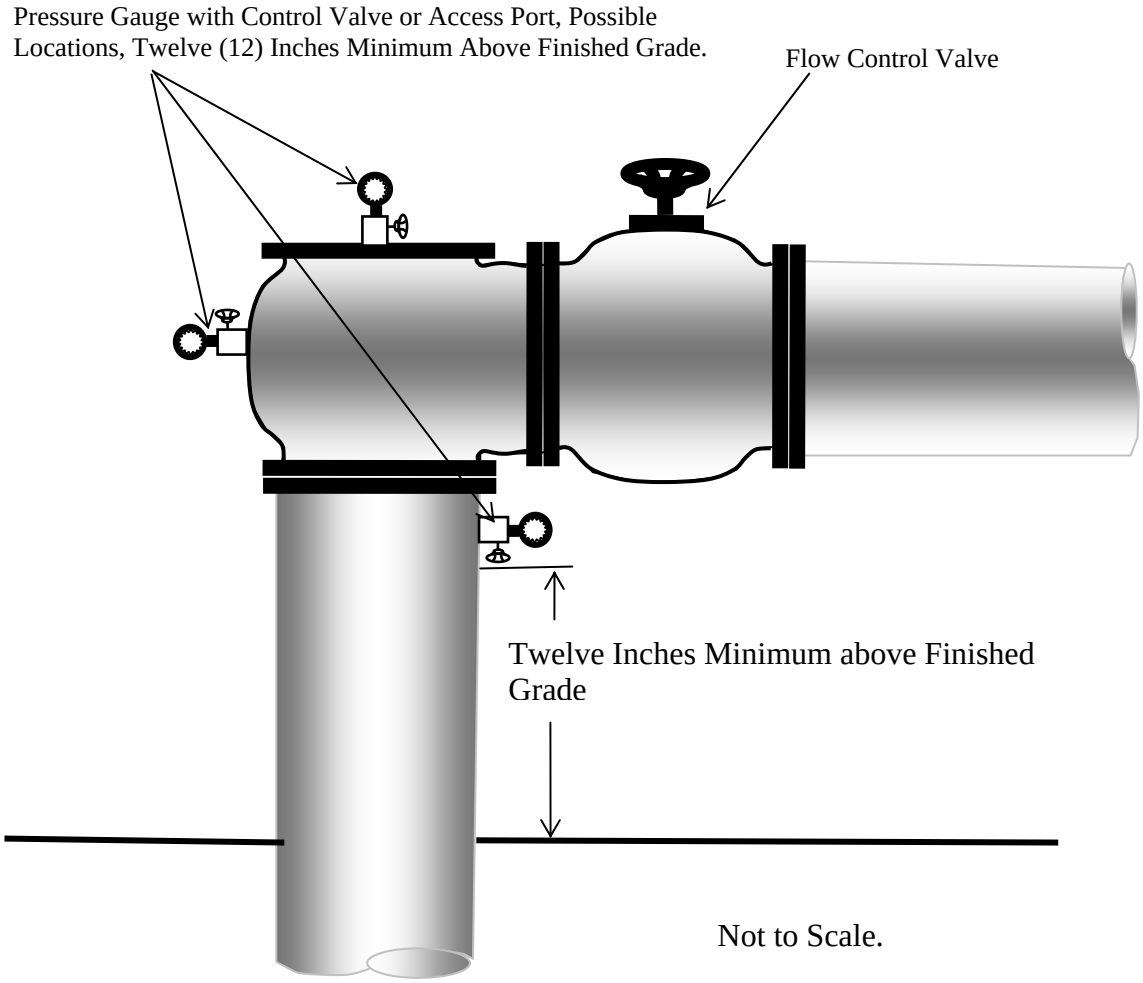

Note. Application and Approval of Control Device is Required on Any Flowing Artesian Well per Section 42-1603, Idaho Code.

Figure 12. Well Cap and Access Port.

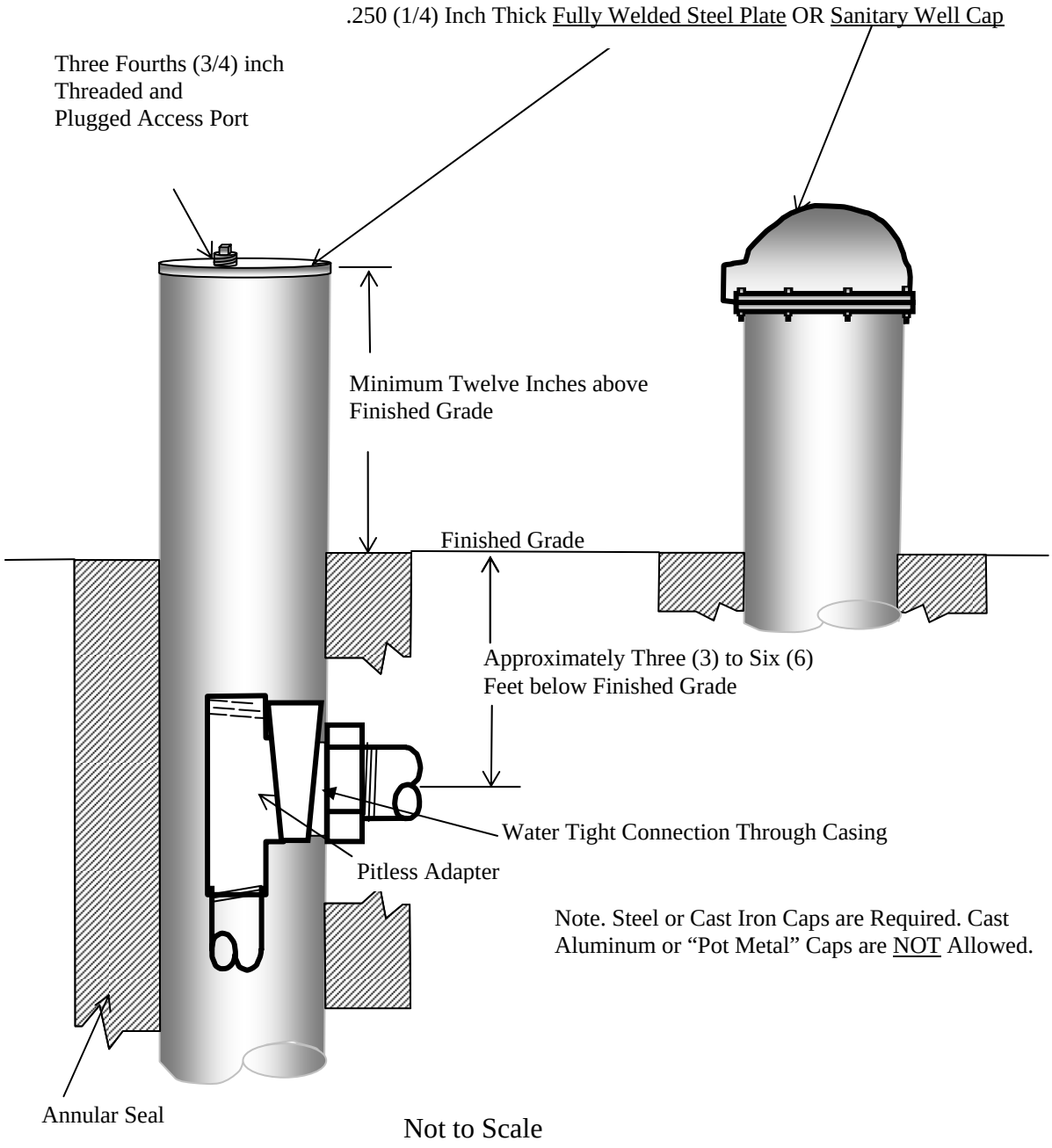

Figure 13. Casing Segments for Low Temperature Geothermal Wells.

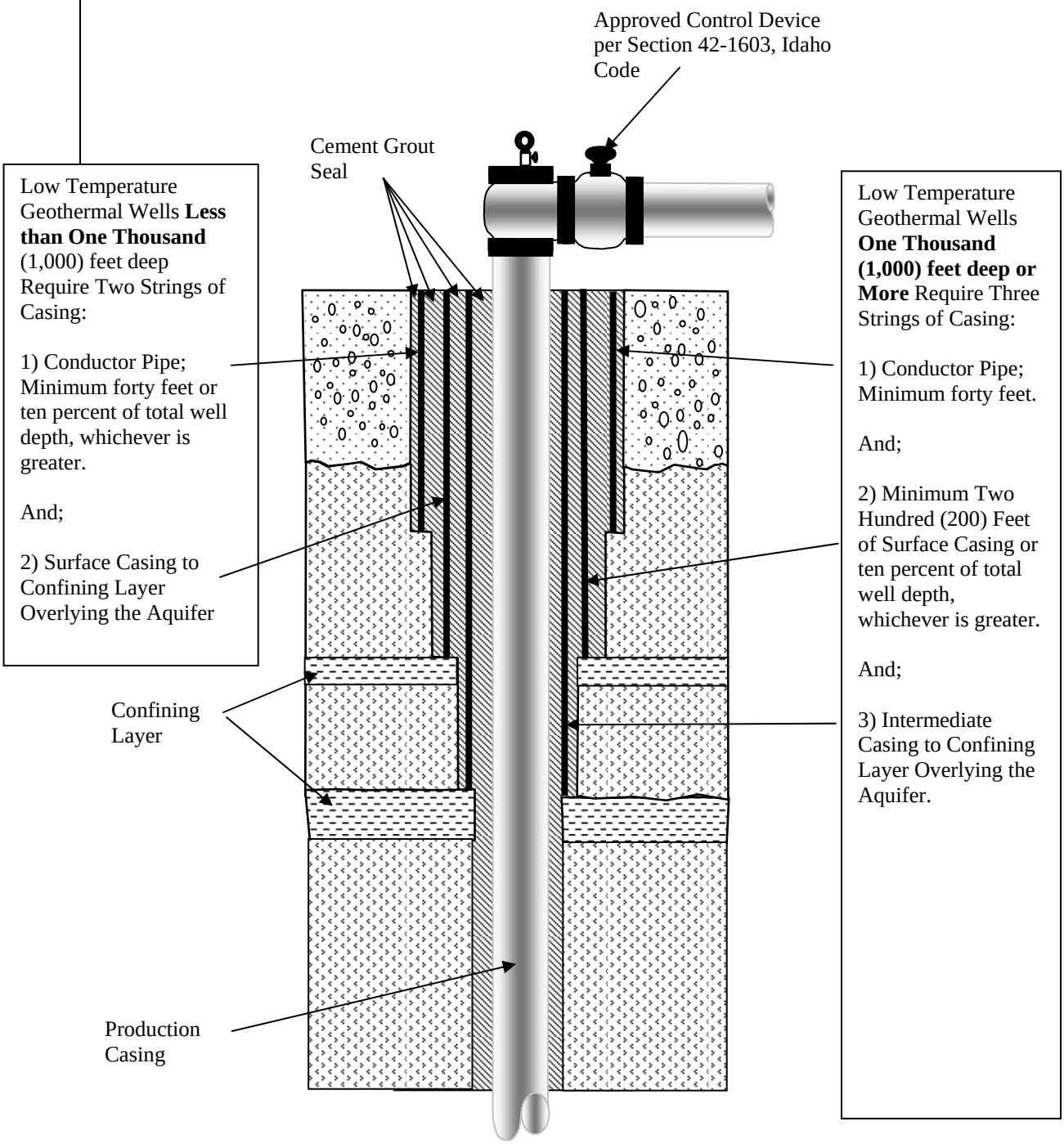

Not to Scale.