University of Idaho
College of Agricultural and Life Sciences

Economic Analysis of Plans to Further Utilize Local Geothermal Resources in Lava Hot Springs, Idaho

By
Lindy Widner, Kevin Rafferty, Steven Peterson, James R. Nelson*

Department of Agricultural Economics and Rural Sociology
A.E. Extension Series No. 03-12

November 3, 2003

Funding for this study was provided by

The U.S. Department of Energy through The Idaho State Department of Water Resources-Energy Division,

U.S. Economic Development Administration,
and
The University of Idaho

College of Agricultural and Life Sciences
Agricultural Economics and Rural Sociology
University of Idaho
Moscow, ID 83844-2334

---

*Nelson, Widner and Peterson are Professor, Economic Research Analyst and Economic Research Associate, respectively in the Department of Agricultural Economics and Rural Sociology at the University of Idaho. Rafferty is a consulting mechanical engineer in Klamath Falls, Oregon.

EXECUTIVE SUMMARY

ECONOMIC ANALYSIS OF PLANS TO FURTHER UTILIZE LOCAL GEOTHERMAL RESOURCES IN LAVA HOT SPRINGS, IDAHO

Much of the economic base of the community of Lava Hot Springs is associated with tourism. This tourism is tied to year-round spa activities based on local geothermal resources. There is potential for further development of these geothermal resources. Estimated costs and economic impacts of some planned additional geothermal development activities are presented in this report.

Lava Hot Springs Pool Complex Modifications

The existing Lava Hot Springs swimming pool complex includes a lap pool, an office and dressing room building, and an Olympic size swimming and diving pool. The entire complex is outdoors, and is used only from mid-May through Labor Day. Estimated costs of enclosing the lap pool and using the facility year-round are $213,400. This includes the construction costs of a geothermally-heated pool enclosure ($187,400), as well as costs of restoring the currently non-functional geothermal space heating system in the office and dressing room building ($26,000). This is equivalent to an annual investment cost, over 20 years at 7% interest, of $20,143.45.

For this project to be considered economically feasible, the annual investment cost of $16,103.43, plus any operating costs (wages, "lights", laundry, etc.) and maintenance costs associated with keeping the lap pool open in off-season months must be covered. The most obvious source of revenues to cover these costs is revenue generated by admission sales in off-season months.

If estimated revenue streams from additional admission sales fall short of covering additional annual expenditures (investment costs, operating and maintenance costs attributed to enclosing the lap pool and operating it on a year-round basis), alternative revenue sources could be explored. If the community determines that having the pool open on a year-round basis is of benefit to the community as a whole, a portion of local taxes might be designated to the project. Also, it is possible that having the enclosed *and* geothermally heated complex open on a year round basis might provide unique opportunities for securing government and foundation grants that would make the project economically feasible. The ability of stakeholders (Lava Hot Springs Foundation, Lava Hot Springs community, local government) to identify potential sources of alternative revenues, and to secure such funding, will likely be crucial to the economic success of the project.

Geothermal Space Heating Community Center

Lava Hot Springs has a Community Center, owned by the Lava Hot Springs Foundation and operated by a local senior citizens group. The building is heated with a conventional forced air gas system. Three options for converting the heating system to geothermal space heating were identified as technically feasible. To select the best

option, researchers used the criteria: least total annual cost of converting to geothermal space heating. The option selected based on this criteria (Option 2) would require an investment of $20,000, displace approximately 80% of the existing annual heating needs of the building, and save an estimated $1,080.34 per year in natural gas costs (20% of the annual heating needs would still be fueled using natural gas at an estimated cost of $270.08). At 7% interest over 20 years, the $20,000 conversion cost is equivalent to an annualized investment cost of $1,887.86. The resulting total annual cost (composed of annual investment cost and remaining conventional heating fuel costs) is $2,157.94 or an additional annual cost of $807.52. Option 1 would require the same investment of $20,000, but would only displace approximately 50% of the building's annual heating needs. Option 3 would displace 100% of the existing annual heating fuel needs, but would cost significantly more ($30,000) and would result in a total annual cost of $2,831.79 or an additional annual cost of $1,481.37.

None of the options identified as technically feasible for retrofitting the Community Center to utilize geothermal space heating will "pay their own way." Annual fuel cost savings would be more than offset by the annualized investment costs of retrofitting the building's heating system to use geothermal energy. Lava Hot Springs decision-makers should consider how these costs would be covered before deciding to switch the Community Center's heating system to geothermal. Also, they should consider the uncertainties associated with such "change-overs" before making a final decision.

Potential Impacts on Lava Hot Springs Economy

Conservative estimates of the local economic impacts of the planned additional geothermal development in Lava Hot Springs considered in this report are 3 total jobs, $48,000 in earnings (wages and salaries of workers and profits of proprietors), $145,000 in annual sales or gross revenues of business firms, $75,000 in value added, and $7,500 in indirect business taxes.

These impacts are conservative, because they do not account for the likelihood that keeping the lap pool open on a year-round basis (8½ additional months) will bring more winter visitors to Lava Hot Springs. More winter visitors mean more local economic activity. Even so, the economic impacts, as estimated, are meaningful in a small town such as Lava Hot Springs where new jobs will probably go to local residents who are currently unemployed.

ECONOMIC ANALYSIS OF PLANS TO FURTHER UTILIZE LOCAL GEOTHERMAL RESOURCES IN LAVA HOT SPRINGS, IDAHO

By

LINDY WIDNER, KEVIN RAFFERTY, STEVEN PETERSON, JAMES R. NELSON

PROJECT DEFINITION AND GEOTHERMAL SITE CHARACTERISTICS

Lava Hot Springs, Idaho, a small community located about thirty-five miles southeast of Pocatello, was once part of the original Fort Hall Indian Reservation. The federal government purchased the land, approximately 178 acres, as part of a treaty agreement with the Indians in the late 1800's. A 1902 Act granted the lands to the State of Idaho. The state formed the Lava Hot Springs Foundation, an agency within the Idaho Department of Parks and Recreation, to manage several hot springs on the land for public use. (Lava Hot Springs Foundation)

Today, the Lava Hot Springs Foundation operates a facility that features soaking pools, massage and spa facilities, an Olympic size swimming pool, a smaller lap pool, and volleyball and basketball courts. The water from a local geothermal well owned by the Foundation is used to heat the water in the swimming pools. Small on-site springs provide hot water to soaking pools, and a small on-site hot well is used to heat dressing rooms and sidewalks at the soaking pools facility. (Lava Hot Springs Foundation) Several other wells and springs supply hot water for hot tubs and soaking pools in private resort facilities in the community. One hotel facility utilizes geothermal water for space heating.

The Lava Hot Springs well is located approximately ⅛ mile east of the community center and ¼ mile west of the pool complex. An unknown quantity of geothermal water moves through the 12-inch pipeline from the well to the swimming pool complex. This is thought to be in the range of 350 gallons per minute (gpm), based on the pump size and information from operating personnel. Pumping capacity is controllable using a variable frequency drive responding to pipeline pressure, though it is operated manually most of the time. The temperature of the water leaving the pumping facility is approximately 114° Fahrenheit, however it varies somewhat according to season and flow rate. The geothermal water exiting the heating system is discharged into the Portneuf River just south of the Olympic Pool.

Currently, the geothermal resource provided by the Lava Hot Springs well is used only to heat the two swimming pools. The Olympic-sized pool has a capacity of 800,000 gallons and the smaller lap pool has a capacity of 80,000 gallons. The pool complex (composed of the Olympic-sized pool, the lap pool, and adjacent office and dressing room building) is operated from mid-May through Labor Day. The remainder of the year (defined as off-season months for the purpose of this paper), the complex remains closed.

Personnel with the Energy Division of the Idaho Department of Water Resources and with University of Idaho Extension have worked to provide the City of Lava Hot Springs and the Lava Hot Springs Foundation with technical and economic information related to further development of the local geothermal resource as proposed by the Foundation and the City. The proposed project consists of:

- enclosing the lap pool in order to operate the complex on a year-round basis;
- heating the adjacent building and new pool enclosure using geothermal energy;
- and heating the community center with geothermal energy.

Further utilization of the Lava Hot Springs well resource will be in addition to its continued use for heating the pool water at the swimming complex.

The authors of this report conducted a two part analysis of the proposed project, including:

1. evaluation of technical and economic feasibilities for each of the proposed improvements, and
2. estimation of economic impacts of completing the project.

Results of the analysis are presented in the following pages.

TECHNICAL FEASIBILITY AND COST ANALYSIS OF PROPOSED IMPROVEMENTS

Lava Hot Springs Pool Complex Modifications

The Lava Hot Springs pool complex consists of two pools – a large Olympic sized pool with a diving platform and a smaller 75 ft x 42 ft lap pool. Adjacent to the pool is a locker room/office/mechanical building. Water, at approximately 112°F (arrival temperature), is piped to the pool facility and used for heating both pools. Plate and frame heat exchangers (two for the large pool and one for the small pool) isolate the geothermal water from the pool water and facilitate more efficient chemical treatment of the pool water than would be the case if the geothermal water were used directly in the pool. A fourth heat exchanger is installed in the hot water heating loop such that geothermal heat can be used for space heating of the building. However, the space heating loop for the building is not currently functional and the building is not heated through any other means.

There is currently consideration being given to enclosing the smaller lap pool and operating that portion of the facility on a year-round basis. Should the lap pool be enclosed and operated year-round, heating the adjacent building would become necessary. Costs for enclosing the lap pool have been estimated, and a site visit was conducted on July 15, 2003 to determine the potential for restoring the existing geothermal space heating system and possibly space heating the proposed pool enclosure with geothermal energy.

Lap Pool Enclosure: Construction Cost Analysis

At this time the lap pool is partially enclosed by walls along the entire long dimension and part of the short dimension of the pool. Key aspects of any enclosed pool are moisture control and the avoidance of moisture induced structural damage. Generally this consists of humidity control using either ventilation air or mechanical dehumidification to remove moisture from the air. Evaporation is a strong function of pool water temperature, and the temperature to be maintained has an impact on the cost of the mechanical equipment required. For a pool of this size (75 ft x 42 ft), evaporation of approximately 250 lb per hour can be expected at a water temperature of 90°F and an air temperature of 80°F. This would require a ventilation rate of approximately 6000 cubic feet per minute (cfm) at winter conditions. Two exhaust fans would remove the moisture-laden air from the building. Heating and ventilation units would provide the necessary ventilation air for the building.

Table 1 shows estimated lap pool enclosure investment costs with a traditional heating and ventilation system, based on architectural plans. Estimates were made using the Marshall and Swift Valuation Tool. A significant portion of the capital costs is attributed to the heating and ventilation system because of the unique requirements of enclosed pools. Detailed plans for the proposed enclosure of the lap pool are shown in Appendix Figures 1 and 2.

Table 1. Estimated Investment Costs for Proposed Conventionally Heated Pool Enclosure

Cost Component	**cost ($)**
ROOF	
Removal of old roofing	$ 1,700.00
Roofing (above average)	
Heavy Composition	$ 19,800.00
Insulation	$ 11,900.00
Plywood Decking	$ 5,800.00
WALLS (above average)	
Metal/Glass Panels	$ 28,700.00
Aluminum/Steel Siding	$ 7,400.00
ELECTRICAL AND LIGHTING	$ 36,900.00
HEATING AND VENTILATION SYSTEM	$ 25,000.00
EXHAUST FANS (2)	$ 4,000.00
SUBTOTAL	$ 137,200.00
CONTINGENCY	$ 25,000.00
TOTAL COST OF ENCLOSURE	***$ 162,200.00***

One method of determining the feasibility of a proposed project is comparing projected revenue streams to projected expenditures. Annual expenditures can be broken into two categories: annual operating and maintenance costs and annualized investment costs. Operating and maintenance costs are composed of costs associated with the operation of the pool beyond the months that the current pool complex is already open. Investment costs consist of the actual capital investment necessary to enclose the pool and were annualized over a twenty-year period to determine annual investment costs. An interest rate of 7% was used. The annualized investment cost for enclosing the lap pool and using a conventional heating and ventilation system was estimated as $15,310.53 (Appendix Table 1).

For the purposes of this analysis, all investment costs were annualized using a 7% interest rate and a 20-year project life. The interest rate is designed to reflect opportunity cost and time value of money. Opportunity cost is defined by economists as the cost of forgoing the next best alternative to make the chosen investment. A common tool for opportunity cost valuation is using an interest rate that is typical of an expected market return if the money had been otherwise invested. The time value of money represents the value of having money at your disposal today rather than in the future. For example, if given the choice, most people would prefer to have $1,000 today rather than $1,000 next year. Time value of money is also commonly defined as a percentage value of the total investment.

Geothermal Space Heat Restoration in Existing Office Building: Costs and Savings
Enclosing and operating the lap pool on a year round basis would require that the adjacent office and locker-room building be operable year-round as well. Specifically, it would require that the building be heated during off-season months. Assuming that installing a new conventional system is similar in cost to restoring the existing geothermal system, it is reasonable to assume that the geothermal system would be the most cost effective investment. This is based on the fact that there are no operational heating costs (especially gas bills) incurred and on the assumption that maintenance costs should be similar when using geothermal space heat as compared to a conventional gas heating system.

The currently nonfunctional space heating system consists of 5 individual heating units – two unit heaters in each of the dressing rooms and a larger fan coil unit serving the office and lobby area of the building. One of the unit heaters in the men's dressing room is missing. Among the reasons reported for the abandonment of this system is freeze damage. Operating personnel reported no damage from freezing to other piping in the building, so it seems unlikely that such damage occurred to the heating system piping. However, it is possible that the coil in the large fan coil unit experienced some damage from freezing.

Reestablishing the operation of this system will require the replacement of all of the four unit heaters in the locker rooms. These units are not suitable for operation with the low geothermal water temperatures available (approximately 108°F after heat exchange) and would result in unacceptably low supply air temperature to the space if used. Replacement with fan coil units with adequately designed coils (3 row minimum) would provide for satisfactory operation in these areas. The existing fan coil unit serving the office/lobby areas of the building can be retained, but the coil should

Table 2 Building Heating System Repair Estimate

Heat Exchanger	$2,500
New Fan Coil Units	12,600
Circulating pump	1,600
Controls	1,000
Coil replacement	1,500
Subtotal	19,200
Contingency	3,800
Engineering	3,000
Total	$26,000

be checked for adequate design and for any signs of freeze damage. Flow requirement for the system, assuming a 13°F temperature drop on the geothermal fluid, would amount to 46 gpm for the assumed 300,000 Btu/hr load.

Table 2 outlines the cost of the modifications required to place the geothermal heating system for the existing building back in service. This would involve replacement of the existing plate heat exchanger, replacement of the 4 existing unit heaters (assumed to be 50,000 Btu/hr capacity each – loads should be verified in the course of final design) with fan coil units, replacement of the coil in the existing fan coil unit, new controls and a new ½ horsepower (hp) circulating pump. This estimate assumes that the existing piping for the system can be re-used with only minimal replacement in the areas where the terminal unit work will be required. If the coil in the existing fan coil unit is equipped for ventilation air supply, filling the system with a water/glycol mixture would be advisable.

The investment cost of restoring the pool building geothermal space heating system was annualized over twenty years, assuming a 7% interest rate, to represent opportunity cost of the investment and time value of money. Annualized investment costs for restoring geothermal space heating to the adjacent office and dressing room building are estimated to be $2,454.22 (Appendix Table 2).

Space Heating Planned Pool Enclosure : Costs, Savings, & Other Considerations
Utilizing geothermal space heating in order to maintain an acceptable temperature within the enclosure is also being considered. Integrating the pool enclosure geothermal space heating system with the office and dressing room building system would be efficient since both systems are necessary if the small pool is operated on a year round basis.

To determine the economic feasibility of constructing the pool enclosure, including the necessary equipment to utilize geothermal heat, projected revenue streams and cost savings should be compared to projected expenditures, composed of investment costs and operating and maintenance costs. Investment costs include the construction costs of the enclosure, plus the incremental costs incurred by the additional investment in geothermal space heating. Using two fan coil units at 4000 cfm, each designed for a discharge air temperature of 90°F, would result in a total load of approximately 440,000 Btu/hr. Based on an 18°F temperature drop on the loop, this would require a loop flow of 49 gpm necessitating 2 ½" piping for the main supply and return lines. Depending on the construction of the building, actual heating load may be different than the assumed value in these calculations, but this should not substantially impact equipment costs.

Table 3 outlines investment costs of constructing the pool enclosure plus the incremental costs associated with connecting the pool enclosure heating system to the locker room building system. Again, investment costs were annualized over a twenty-year period, assuming a 7% interest rate. The investment cost is estimated to be $187,400, resulting in an annualized investment cost of $17,689.23 (Appendix Table 3).

Maintenance costs may vary slightly for this scenario due to the change in capital equipment and associated maintenance costs necessary for geothermal space heating. This factor has not been included in the analysis because the variation in costs should not be significant, as maintenance is already performed on geothermal equipment used to heat pool water and it is difficult to accurately predict what the difference in maintenance costs would be from a traditional heating system. Furthermore, it is equally possible that adding a geothermal space heating system would result in a net reduction of maintenance performed on heating systems, rather than increase maintenance requirements.

Operating costs should be significantly less than in the first scenario. Annual fuel (gas) costs using a traditional heating and ventilation system in the pool enclosure are estimated to be $15,643.35 each year (Appendix Figure 3). These costs can be entirely avoided by utilizing geothermal space heating, resulting in a heating cost savings of $15,643.35 annually.

Table 3. Estimated Investment Costs for Proposed Geothermal Heated Pool Enclosure

Cost Component	**cost ($)**
ROOF	
Removal of old roofing	$ 1,700.00
Roofing (above average)	
Heavy Composition	$ 19,800.00
Insulation	$ 11,900.00
Plywood Decking	$ 5,800.00
WALLS (above average)	
Metal/Glass Panels	$ 28,700.00
Aluminum/Steel Siding	$ 7,400.00
ELECTRICAL AND LIGHTING	$ 36,900.00
EXHAUST FANS (2)	$ 4,000.00
GEOTHERMAL INCREMENTAL COSTS	
Heating and Ventilation Units (2)	$ 30,000.00
Piping	$ 4,000.00
Heat Exchanger	$ 2,600.00
Antifreeze	$ 600.00
Controls	$ 4,000.00
SUBTOTAL	$ 157,400.00
CONTINGENCY	$ 25,000.00
ENGINEERING	$ 5,000.00
TOTAL COST OF ENCLOSURE	***$ 187,400.00***

To determine which enclosure makes the most economic sense, heating cost savings should be compared to the estimated additional annual investment cost associated with constructing an enclosure that utilizes geothermal space heat rather than a conventional heating and ventilation system. To find the additional investment cost associated with geothermal space heating the pool enclosure, the investment cost for the conventionally heated enclosure was subtracted from the investment cost for the geothermal space heated enclosure. The additional investment cost is estimated to be $25,200 or an additional annualized cost of $2378.70. The additional annualized investment cost for including a geothermal space heating system is compared to the annual heating cost savings of $15,643.35, resulting in an estimated annual net savings of $13,264.65. The availability of the geothermal resource for heating of ventilation air in winter conditions

(normally a costly operational issue) makes this option more attractive than it would be in a conventionally fuelled facility.

Swimming Pool Complex Project Feasibility and Conclusions

Utilizing geothermal space heating rather than a conventional heating and ventilation system was selected for the pool enclosure based on the assumption that net annual savings (composed of avoided annual heating costs less annual additional investment costs) are generated. In fact, annual savings of utilizing the geothermal space heating and ventilation system are estimated to be $13,264.65. Enclosing the pool and equipping it with a geothermal space heating and ventilation system would require an investment of $187,400. Additionally, operating the pool on a year-round basis requires the pool building to remain open and heated. The investment cost of restoring the existing geothermal system is $26,000. This results in a total investment cost for the pool complex modifications of $213,400. The annual investment cost is equal to $20,143.45, based on a 7% interest rate and a twenty-year investment period (Appendix Table 4).

For this project to be considered economically feasible, the annual investment cost of $20,143.45, plus any operating costs (wages, "lights", laundry, etc.) and maintenance costs associated with keeping the lap pool open in off-season months must be covered. The most obvious source of revenues to cover these costs is revenue generated by admission sales in off-season months.

If estimated revenue streams from additional admission sales fall short of covering additional annual expenditures (investment costs, operating and maintenance costs attributed to enclosing the lap pool and operating it on a year-round basis), alternative revenue sources could be explored. If the community determines that having the pool open on a year-round basis is of benefit to the community as a whole, a portion of local taxes might be designated to the project. Also, it is possible that having the enclosed *and* geothermally heated complex open on a year round basis might provide unique opportunities for securing government and foundation grants that would make the project economically feasible. The ability of stakeholders (Lava Hot Springs Foundation, Lava Hot Springs community, local government) to identify potential sources of alternative revenues, and to secure such funding, will likely be crucial to the economic success of the project.

Geothermal Space Heating Community Center

The Lava Hot Springs Community Center building was constructed in 1936 and is heated primarily by two Carrier condensing type gas furnaces located in a basement utility room. The furnaces operate in parallel on a common duct system and have a combined rate capacity of 186,000 Btu/hr output, but the actual capacity due to elevation is likely somewhat less than this figure. There are gas log units installed in fireplaces at 3 locations in the building but it is unknown the extent to which these are used for space heating. The main floor of the building includes a 2,625 square foot main hall and 1,400 square feet in the two wings. A basement, which appears to be used primarily for storage, adds another 1,400 square feet. The Community Center is located within approximately 100 ft of the existing pipeline delivering water from the hot

springs to the community pool. However, a pipeline from the existing hot water pipe to the Community Center would cross a paved road.

Geothermal applications such as heating the Community Center normally involve the installation of hot water coils in the existing ductwork and the use of the existing furnace fans to provide air flow. In this case, the available water temperature is quite low and assuming a temperature of 110°F arriving at the mechanical room, there is insufficient temperature to permit the use of an isolation heat exchanger (due to temperature loss associated with the heat exchanger) between the geothermal water and the coils in the ductwork. Using the geothermal water directly in the coils does present the prospect of potential fouling due to scaling and/or corrosion, however the water chemistry does not appear to be particularly problematic.

Based on the water temperature of 110°F, 3 row coils could produce supply air temperatures of approximately 100°F to the space. This value is substantially less than the supply air temperature currently being delivered by the furnaces (likely in the range of 115° to 135°F). As a result, the capacity of the system available for geothermal operation will be less than that of the current system. At the 100°F supply air temperature and an air flow in the middle of the range of which the furnaces are capable (the added resistance of the coils would preclude operation at peak air flow rates), the expected maximum capacity available would be approximately 80,000 Btu/hr. Assuming that the existing furnaces are sized for the actual heating load of the building and that their rated capacity is decreased by 5% due to the elevation, the geothermal system would have a capacity of approximately 45% that of the existing system. Several options are possible to address the capacity deficit, including the following:

1. retrofit coils in the supply air ductwork and operate the geothermal heating as a first stage in a 2-stage system in which all heating at lower outside temperatures is provided by the existing gas furnaces
2. retrofit coils in the return air ductwork and operate the geothermal system as the first stage of a 2-stage system in which both the geothermal coils and the furnaces operate at lower outdoor air temperatures.
3. Retrofit coils in the existing furnaces to provide a portion of the heating capacity and add additional geothermally supplied fan coil heating units to the building to provide the necessary additional capacity.

Energy savings would vary with Option 1 capturing the least savings and Option 3 the most savings (virtually all existing space heating by geothermal). Retrofit costs for Options 1 and 2 would be similar. Option 3 would cost much more than the other two options. The system layouts for all options are similar (Appendix Figure 4).

Retrofit Options Considerations, Costs and Savings

Option 1 would involve the installation of new hot water coils in the existing supply air ductwork near the outlet of the furnaces. Space is very limited, and to accommodate the required coil area (4 sq ft coil face area each), it may be necessary to place the coils in the ductwork at an angle. During the site visit an installation immediately at the outlet

of the furnaces was envisioned. Calculations indicate, however, that there is insufficient duct cross section in this location.

Provided verification of adequate space for installation, two individual coils or a single larger coil would be placed in the ductwork. A 3-row configuration at 12 fins/inch would be capable of generating 100°F supply air temperature. The coil(s) would provide all heating needs down to a temperature of approximately 40°F (30°F in night setback mode) below which an outdoor thermostat would deactivate the geothermal system and the gas burners in the existing furnaces would be enabled. At all temperatures below 40°F, the gas burners would handle the load. Water would be delivered from the existing hot springs line through new 1 ½" buried supply line at a flow of 16 gpm. This line could be constructed of either pre-insulated PVC or pre-insulated polyethylene pipe. A ¼ hp circulating pump would provide flow through the 1 ½" line to the coils. Water (at 100°F) from the coil(s) would be returned to the main hot springs line through a second 1 ½" line.

Based on the capacity of the geothermal hot water coils and the existing furnaces, this arrangement would be capable of displacing approximately 50% of the existing annual heating needs of the building. The gas system would meet the remaining 50%.

Costs for this option are outlined in Table 4. The largest uncertainty in the cost is associated with the manner in which the geothermal lines serving the building will be installed under the road. The table costs assume the ability to "cut" the pavement and trench across the road. If horizontal boring under the road should be required, costs would increase by approximately $4000 to $5000. In addition, the space limitations in the furnace room could impact costs depending upon the specifics of the coil installation, though a generous allowance has been included in the estimate for labor associated with this task.

Assuming the uncertainties mentioned above do not affect costs, the estimated annualized investment cost of the Option 1 retrofit (over 20 years at 7%) is $1,887.86 per year (Appendix Table 5). Based on current gas usage in the Community Center and projected gas prices, continued conventional fuel needs will be an estimated $675.21 and fuel cost savings are estimated to be $675.21 annually (Appendix Figure 5). This results in an estimated total annual cost of $2,563.07 annually or an additional annual cost of $1,212.65 if Option 1 is adopted.

Option 2 would be very similar to Option 1 in terms of the installation. The primary difference would be the location of the new hot water coils. In this case the coils would be installed in the return air duct adjacent to the furnaces. In this location, the coils would provide a capacity just slightly less than in Option 1 (due to the reduced fan performance handling heated air) but would be able to operate in conjunction with the furnace burner at lower outside temperature conditions. A two-stage thermostat would control the system in such a way as to enable the gas burners when the geothermal system could no longer meet the load. As a result of this capability, the savings under this option would amount to approximately 80% of existing annual gas space heating energy use.

The installation of the hot water coils in the return air duct would be advantageous since the cost would be the same as for the supply air installation and the savings substantially greater. With the return air location, air entering the existing furnace fans would be 100°F. This has three implications in terms of system operation. The mass flow of the fans would be reduced due to the lower density of the air – thus reducing heating capacity; the cooling of the fan motors would be reduced due to the higher temperature air; and finally it would be necessary to limit the supply air temperature during combined operation (geothermal and gas). Coil design could be adjusted (fin spacing, surface area) to compensate for the reduced air density. Similar return air installations have been made without adverse impact on the fan motors, but they should be checked for allowable temperature rise in the course of final design. The supply air temperature could be controlled by increasing airflow to the maximum or by de-rating the burners in the furnace.

Table 4. Estimated Installation Costs: Options 1 and 2

Hot water coils	$ 4,000
11/2" buried lines to building	7,300
1 ½" lines in building	2,500
Circulating pump	1,000
Misc mechanical and electrical	200
Subtotal	*15,000*
Contingency	2,000
Engineering	3,000
Total	**$ 20,000**

As mentioned earlier, the return duct installation was not evaluated during the site visit and to the extent that space is available for coil installation, the retrofit cost would be essentially the same as for the supply air installation of Option 1. The only difference would be a small incremental cost of somewhat more effective hot water coils – a value smaller than the error margin of this estimate.

Assuming the specified uncertainties do not affect costs, the annualized investment cost of the Option 2 retrofit (over 20 years at 7% interest) is the same as for Option 1, $1,887.56 per year (Appendix Table 5). However, estimated fuel cost savings are greater under Option 2: $1,080.34 annually compared with $675.21 annually (Appendix Figure 5). The remaining annual conventional fuel costs are estimated to be $270.08. This results in an estimated total annual cost of $2,157.94 or an additional cost of $807.52 annually if Option 2 is adopted.

Option 3 would involve the same basic installation as described in Option 1 plus some additional equipment to provide for the unmet portion of the heating requirement. Assuming that the existing duct system would permit the air flow from the existing furnaces to be directed primarily to the basement and the two wings of the building, two new fan coil units could be installed in the main hall to provide the additional capacity required.

Using two fan coil units at 50,000 Btu/hr each, the capacity of the geothermal system would match that of the existing gas furnaces. These units could be suspended from the ceiling in the main hall, or space permitting, concealed in adjacent rooms and

ducted to the main hall. The lower cost suspended option was used to develop the cost estimate for the table below. Adding the two fan coil units would raise the geothermal flow requirement to 36 gpm and this would necessitate the use of 2" pipe for the supply and return lines to the building, and an increase in pump size to 1/3 hp. The ability to meet 100% of the heating needs of the building would allow the system outlined here to displace 100% of the existing space heating energy consumption of the building. Installation costs for Option 3 are presented in Table 5. Estimated annualized investment cost of the Option 3 retrofit is $2,831.79 per year (Appendix Table 6). Under this system, there would be no conventional heating fuel needs. Therefore, the estimated total annual cost is equal to the annual investment cost of $2,831.79. The additional annualized costs of adopting Option 3 would be $1,481.37.

Table 5 Estimated Installation Costs: Option 3	
Hot water coils	$4,000
Fan coil units	6,300
2" buried lines to building	8,000
2" lines in building	2,700
Circulating pump	1,600
Misc mechanical and electrical	200
Subtotal	*22,800*
Contingency	3,400
Engineering	3,800
Total	**$30,000**

Impact of Community Center on Hot Springs Line

Heating of the community center should have little if any impact on the operation of the pool since the space heating of the building will peak during the winter months when the pool is not in operation. Even if the smaller pool is operated in the winter months the impact of the community center on the heat available from the hot springs line would be minimal. The line is estimated to carry 350 gpm at a temperature of 114°F. Using this water to primarily heat a pool and adjacent locker rooms, it should be possible to reduce the water to approximately 90°F with the combined loads. This would amount to an available capacity of 4,200,000 Btu/hr. The maximum load the Community Center would impose (Option 3) would amount to 180,000 Btu/hr or about 4% of the heat available from the line.

Community Center Project Conclusions and Recommendations

According to estimates presented in this report, none of the options identified as technically feasible for retrofitting the Community Center to utilize geothermal space heating will "pay their own way." They would result in increased annual heating costs (both investment and operational) from as little as $807.52 per year to as much as $1,418.37 per year. Lava Hot Springs decision-makers should consider how these costs would be covered before retrofitting the Community Center to heat it with geothermal energy. Also, they should consider the uncertainties associated with such "change-overs" before making a final decision.

Adequacy of Resource
Operation of the smaller pool and the heating of the pool building during the winter months will impose new loads on the geothermal fluid but these are well within the capacity of the existing resource, pump and pipeline.

Based on an assumed arrival temperature (at the pool facility) of 112°F, the total flow required for the pool building heating system will amount to approximately 46 gpm. Flow requirement for the pool enclosure heating and ventilation system would peak at 49 gpm based on the assumptions outlined above. This would leave a total of more than 250 gpm for the heating of the pool. Even assuming a temperature drop of only 15°F on the pool heat exchanger, the flow requirement for pool heat would amount to only 43 gpm. This results in a total geothermal requirement for heating of approximately 138 gpm of the available 350 gpm.

POTENTIAL IMPACTS ON THE LAVA HOT SPRINGS ECONOMY

Economies are built on what economists call basic business activity. Basic business activity in a local economy is sales and related activity (wages paid, taxes paid, profits made) by firms that sell their products outside the economy (export). Common exporting firms in an economy are farms and manufacturing firms. In general, these types of firms produce goods and services that are consumed by people from outside the area. Non-exporting firms in an economy provide goods and services to the basic firms, the people who are employed in the basic firms, and other non-basic goods and services providers and their employees. Common non-exporting firms in an economy are retail stores, service firms (doctors, lawyers, hair dressers, accountants, mechanics, etc.), and firms that supply inputs to basic firms.

There are however, lots of exceptions to the general cases specified above. A large retail trade mall or a big car dealership may draw customers from an entire state, or even from a multi-state region. The same may be true for the health care workers in a large hospital. In Lava Hot Springs, the business of many retail firms is largely related to tourists from outside the area. So retail trade and services firms can be basic (exporting) firms. Also, a firm that starts-up in an area to provide goods or services that were previously purchased outside the area (import substitution) can have the same types of impacts on the area's economy as a firm producing exports.

The authors of this report used Bannock County data to develop a model of the county's economy. The model is a modified Implan input/output model. A technical discussion of the model and supporting mathematics can be found in Guaderrama, et al. The Bannock County economy model was used to estimate the local economic impacts that would occur if the Lava Hot Springs geothermal development plans discussed above are carried out.

General Characteristics of the Bannock County Economy
Lava Hot Springs is located just south of Pocatello in Bannock County. Bannock County had a population of 75,804 people in 2002, with a density of 68.1 persons per square mile (pqm). The county ranked 5th in the state in population among counties in 2001. The State of Idaho had 15.6 pqm in 2000; Ada County had 285 pqm; and the State of New Jersey had 988 pqm in comparison. The county is defined as 82.7% urban, one of the most urban in the state! Bannock County's population grew 14% from 1990 to 2000, and 0.3% from 2000 to 2002.

The largest city of Bannock County is Pocatello (51,442 people) followed by Chubbuck (9,700), McCammon (805), Inkom (738), Downey (613), Lava Hot Springs (521), and Arimo (348) in 2000. Bannock County lies south of Bingham County, west of Caribou and Bear Lake Counties, north of Franklin County, and east of Power County. (Access Idaho) The federal government owns only 31% of the county and 6.7% is owned by the State of Idaho. Over 60% of the county is privately owned. In terms of land use, 46.4% of the county is in rangeland, 32% is in agriculture and 16% is in forest. The county has the 14th largest agricultural sector in the state in terms of acreage (358,189 acres in farm land). (U.S. Bureau of Economic Analysis)

Bannock County per capita personal income was $21,780 in 2001, which was 89% of the state average and 72% of the national average. Almost 14% of the population was in poverty in 1999 as compared to 11.8% for the State of Idaho. In terms of unemployed, 6.4% of the county's labor force was unemployed in 2002 versus 5.8% of the labor force for the State of Idaho. (Idaho Department of Commerce)

In 2001, services was the largest sector in the Bannock County economy employing 10,388 workers or 24% of the county's workforce. This was followed by state and local government at 18% of the workforce, and trade at 17%. Total sales in the county were approximately $3.078 billion, value-added was $1.7 billion, employee compensation was $1.1 billion, total employment was 42,498 and total indirect business taxes were $123 million. Value added is the regional equivalent of gross domestic product (GDP), which is how economists measure the macroeconomy. Indirect business taxes include all taxes except corporate and personal income taxes. These numbers report total employment, sales, value added, and indirect business taxes as a size measure of economic activity without regard to causation. Causation comes from that economic activity identified as basic activity.

Local Economic Impacts of Lava Hot Springs Geothermal Development Plans
The economic impacts that would be attributable to the planned geothermal development discussed in this report would be those associated with keeping the Lava Hot Springs lap pool open during the entire year, rather than just in the summer. Geothermal development associated with heating the community center would impact the budget of the senior citizens group that pays the heating bill, but would not appreciably impact jobs or income in the community.

Lava Hot Springs decision makers have estimated new staff required to keep the lap pool open through the entire year would equate with 1 and ½ more jobs. Results of the economic model used in this analysis indicate that these jobs would result in the following Bannock County impacts, most of which would occur in Lava Hot Springs:

- Total jobs – 3 (1½ jobs at the pool plus 1½ additional jobs in the county economy).
- Earnings (wages and salaries of workers and profits of proprietors) -- $48,000.
- Annual sales or gross revenues of business firms -- $145,000.
- Value-added -- $75,000.
- Indirect business taxes -- $7,500.

These impacts are conservative, because they do not account for the likelihood that keeping the lap pool open on a year-round basis (8½ additional months) will bring more winter visitors to Lava Hot Springs. More winter visitors mean more local economic activity. Even so, the economic impacts, as estimated, are meaningful in a small town such as Lava Hot Springs where new jobs will probably go to local residents who are currently unemployed.

WORKS CITED

Access Idaho. http://www.accessidaho.org/aboutidaho/county.

Guaderramma, Meyer, Taylor. Developing Coefficients and Building Input-Output Models. Agricultural Economics Extension Paper No. AEE 00-10. University of Idaho, Department of Agricultural Economics and Rural Sociology. Moscow, Idaho. September 2000.

Idaho Department of Commerce. County Profiles of Idaho. 2001. http://www.idoc.state.id.us/idcomm/profiles/index.html

Lava Hot Springs Foundation. http://www.lavahotsprings.com.

Marshall Valuation Service. Marshall & Swift, L.P. 2003 http://www.marshallswift.com.

U.S. Bureau of Economic Analysis. Regional Economic Information System.

APPENDIX TABLES

Table 1. Conventionally Heated Pool Enclosure: Annualized Investment Cost

Table 2. Geothermal Space Heating Restoration for Adjacent Office Building: Annualized Investment Cost

Table 3. Geothermal Heated Pool Enclosure: Annualized Investment Cost

Table 4. Proposed Pool Complex Modifications: Annualized Investment Cost

Table 5. Community Center Geothermal Retrofit Options 1 & 2: Annualized Investment Cost

Table 6. Community Center Geothermal Retrofit Option 3: Annualized Investment Cost

Table 1. Conventionally Heated Pool Enclosure: Annualized Investment Cost

Time Period	Investment	Interest Rate	Interest Accrued	Contribution to Investment	Interest Cost	Total Annual Cost	Remaining Investment Cost
0	$ 162,200.00	7%				$ -	$ 162,200.00
1	$ 162,200.00	7%	$ 11,354.00	$ 3,956.53	$ 11,354.00	$ 15,310.53	$ 158,243.47
2	$ 158,243.47	7%	$ 11,077.04	$ 4,233.49	$ 11,077.04	$ 15,310.53	$ 154,009.98
3	$ 154,009.98	7%	$ 10,780.70	$ 4,529.83	$ 10,780.70	$ 15,310.53	$ 149,480.14
4	$ 149,480.14	7%	$ 10,463.61	$ 4,846.92	$ 10,463.61	$ 15,310.53	$ 144,633.22
5	$ 144,633.22	7%	$ 10,124.33	$ 5,186.21	$ 10,124.33	$ 15,310.53	$ 139,447.01
6	$ 139,447.01	7%	$ 9,761.29	$ 5,549.24	$ 9,761.29	$ 15,310.53	$ 133,897.77
7	$ 133,897.77	7%	$ 9,372.84	$ 5,937.69	$ 9,372.84	$ 15,310.53	$ 127,960.08
8	$ 127,960.08	7%	$ 8,957.21	$ 6,353.33	$ 8,957.21	$ 15,310.53	$ 121,606.76
9	$ 121,606.76	7%	$ 8,512.47	$ 6,798.06	$ 8,512.47	$ 15,310.53	$ 114,808.70
10	$ 114,808.70	7%	$ 8,036.61	$ 7,273.92	$ 8,036.61	$ 15,310.53	$ 107,534.77
11	$ 107,534.77	7%	$ 7,527.43	$ 7,783.10	$ 7,527.43	$ 15,310.53	$ 99,751.68
12	$ 99,751.68	7%	$ 6,982.62	$ 8,327.92	$ 6,982.62	$ 15,310.53	$ 91,423.76
13	$ 91,423.76	7%	$ 6,399.66	$ 8,910.87	$ 6,399.66	$ 15,310.53	$ 82,512.89
14	$ 82,512.89	7%	$ 5,775.90	$ 9,534.63	$ 5,775.90	$ 15,310.53	$ 72,978.26
15	$ 72,978.26	7%	$ 5,108.48	$ 10,202.05	$ 5,108.48	$ 15,310.53	$ 62,776.21
16	$ 62,776.21	7%	$ 4,394.33	$ 10,916.20	$ 4,394.33	$ 15,310.53	$ 51,860.01
17	$ 51,860.01	7%	$ 3,630.20	$ 11,680.33	$ 3,630.20	$ 15,310.53	$ 40,179.68
18	$ 40,179.68	7%	$ 2,812.58	$ 12,497.96	$ 2,812.58	$ 15,310.53	$ 27,681.72
19	$ 27,681.72	7%	$ 1,937.72	$ 13,372.81	$ 1,937.72	$ 15,310.53	$ 14,308.91
20	$ 14,308.91	7%	$ 1,001.62	$ 14,308.91	$ 1,001.62	$ 15,310.53	$ 0.00
Total				***$ 162,200.00***	***$ 144,010.65***	***$ 306,210.65***	

Table 2. Geothermal Space Heating Restoration for Adjacent Office Building: Annualized Investment Cost

Time Period	Investment	Interest Rate	Interest Accrued	Contribution to Investment	Interest Cost	Total Annual Cost	Remaining Investment Cost
0	$ 26,000.00	7%				$ -	$ 26,000.00
1	$ 26,000.00	7%	$ 1,820.00	$ 634.22	$ 1,820.00	$ 2,454.22	$ 25,365.78
2	$ 25,365.78	7%	$ 1,775.60	$ 678.61	$ 1,775.60	$ 2,454.22	$ 24,687.17
3	$ 24,687.17	7%	$ 1,728.10	$ 726.11	$ 1,728.10	$ 2,454.22	$ 23,961.06
4	$ 23,961.06	7%	$ 1,677.27	$ 776.94	$ 1,677.27	$ 2,454.22	$ 23,184.12
5	$ 23,184.12	7%	$ 1,622.89	$ 831.33	$ 1,622.89	$ 2,454.22	$ 22,352.79
6	$ 22,352.79	7%	$ 1,564.70	$ 889.52	$ 1,564.70	$ 2,454.22	$ 21,463.27
7	$ 21,463.27	7%	$ 1,502.43	$ 951.79	$ 1,502.43	$ 2,454.22	$ 20,511.48
8	$ 20,511.48	7%	$ 1,435.80	$ 1,018.41	$ 1,435.80	$ 2,454.22	$ 19,493.07
9	$ 19,493.07	7%	$ 1,364.51	$ 1,089.70	$ 1,364.51	$ 2,454.22	$ 18,403.37
10	$ 18,403.37	7%	$ 1,288.24	$ 1,165.98	$ 1,288.24	$ 2,454.22	$ 17,237.39
11	$ 17,237.39	7%	$ 1,206.62	$ 1,247.60	$ 1,206.62	$ 2,454.22	$ 15,989.79
12	$ 15,989.79	7%	$ 1,119.29	$ 1,334.93	$ 1,119.29	$ 2,454.22	$ 14,654.86
13	$ 14,654.86	7%	$ 1,025.84	$ 1,428.38	$ 1,025.84	$ 2,454.22	$ 13,226.48
14	$ 13,226.48	7%	$ 925.85	$ 1,528.36	$ 925.85	$ 2,454.22	$ 11,698.12
15	$ 11,698.12	7%	$ 818.87	$ 1,635.35	$ 818.87	$ 2,454.22	$ 10,062.77
16	$ 10,062.77	7%	$ 704.39	$ 1,749.82	$ 704.39	$ 2,454.22	$ 8,312.95
17	$ 8,312.95	7%	$ 581.91	$ 1,872.31	$ 581.91	$ 2,454.22	$ 6,440.64
18	$ 6,440.64	7%	$ 450.84	$ 2,003.37	$ 450.84	$ 2,454.22	$ 4,437.27
19	$ 4,437.27	7%	$ 310.61	$ 2,143.61	$ 310.61	$ 2,454.22	$ 2,293.66
20	$ 2,293.66	7%	$ 160.56	$ 2,293.66	$ 160.56	$ 2,454.22	$ (0.00)
Total				***$ 26,000.00***	***$ 23,084.32***	***$ 49,084.32***	

Table 3. Geothermal Heated Pool Enclosure: Annualized Investment Cost

Time Period	Investment	Interest Rate	Interest Accrued	Contribution to Investment	Interest Cost	Total Annual Cost	Remaining Investment Cost
0	$ 187,400.00	7%				$ -	$ 187,400.00
1	$ 187,400.00	7%	$ 13,118.00	$ 4,571.23	$ 13,118.00	$ 17,689.23	$ 182,828.77
2	$ 182,828.77	7%	$ 12,798.01	$ 4,891.22	$ 12,798.01	$ 17,689.23	$ 177,937.55
3	$ 177,937.55	7%	$ 12,455.63	$ 5,233.61	$ 12,455.63	$ 17,689.23	$ 172,703.94
4	$ 172,703.94	7%	$ 12,089.28	$ 5,599.96	$ 12,089.28	$ 17,689.23	$ 167,103.98
5	$ 167,103.98	7%	$ 11,697.28	$ 5,991.96	$ 11,697.28	$ 17,689.23	$ 161,112.02
6	$ 161,112.02	7%	$ 11,277.84	$ 6,411.39	$ 11,277.84	$ 17,689.23	$ 154,700.63
7	$ 154,700.63	7%	$ 10,829.04	$ 6,860.19	$ 10,829.04	$ 17,689.23	$ 147,840.44
8	$ 147,840.44	7%	$ 10,348.83	$ 7,340.40	$ 10,348.83	$ 17,689.23	$ 140,500.04
9	$ 140,500.04	7%	$ 9,835.00	$ 7,854.23	$ 9,835.00	$ 17,689.23	$ 132,645.81
10	$ 132,645.81	7%	$ 9,285.21	$ 8,404.03	$ 9,285.21	$ 17,689.23	$ 124,241.78
11	$ 124,241.78	7%	$ 8,696.92	$ 8,992.31	$ 8,696.92	$ 17,689.23	$ 115,249.47
12	$ 115,249.47	7%	$ 8,067.46	$ 9,621.77	$ 8,067.46	$ 17,689.23	$ 105,627.70
13	$ 105,627.70	7%	$ 7,393.94	$ 10,295.30	$ 7,393.94	$ 17,689.23	$ 95,332.40
14	$ 95,332.40	7%	$ 6,673.27	$ 11,015.97	$ 6,673.27	$ 17,689.23	$ 84,316.44
15	$ 84,316.44	7%	$ 5,902.15	$ 11,787.08	$ 5,902.15	$ 17,689.23	$ 72,529.35
16	$ 72,529.35	7%	$ 5,077.05	$ 12,612.18	$ 5,077.05	$ 17,689.23	$ 59,917.17
17	$ 59,917.17	7%	$ 4,194.20	$ 13,495.03	$ 4,194.20	$ 17,689.23	$ 46,422.14
18	$ 46,422.14	7%	$ 3,249.55	$ 14,439.68	$ 3,249.55	$ 17,689.23	$ 31,982.46
19	$ 31,982.46	7%	$ 2,238.77	$ 15,450.46	$ 2,238.77	$ 17,689.23	$ 16,531.99
20	$ 16,531.99	7%	$ 1,157.24	$ 16,531.99	$ 1,157.24	$ 17,689.23	$ -
Total				***$ 187,400.00***	***$ 166,384.69***	***$ 353,784.69***	

Table 4. Proposed Pool Complex Modifications: Annualized Investment Cost

Time Period	Investment	Interest Rate	Interest Accrued	Contribution to Investment	Interest Cost	Total Annual Cost	Remaining Investment Cost
0	$ 213,400.00	7%				$ -	$ 213,400.00
1	$ 213,400.00	7%	$ 14,938.00	$ 5,205.45	$ 14,938.00	$ 20,143.45	$ 208,194.55
2	$ 208,194.55	7%	$ 14,573.62	$ 5,569.83	$ 14,573.62	$ 20,143.45	$ 202,624.72
3	$ 202,624.72	7%	$ 14,183.73	$ 5,959.72	$ 14,183.73	$ 20,143.45	$ 196,665.00
4	$ 196,665.00	7%	$ 13,766.55	$ 6,376.90	$ 13,766.55	$ 20,143.45	$ 190,288.10
5	$ 190,288.10	7%	$ 13,320.17	$ 6,823.28	$ 13,320.17	$ 20,143.45	$ 183,464.81
6	$ 183,464.81	7%	$ 12,842.54	$ 7,300.91	$ 12,842.54	$ 20,143.45	$ 176,163.90
7	$ 176,163.90	7%	$ 12,331.47	$ 7,811.98	$ 12,331.47	$ 20,143.45	$ 168,351.92
8	$ 168,351.92	7%	$ 11,784.63	$ 8,358.82	$ 11,784.63	$ 20,143.45	$ 159,993.11
9	$ 159,993.11	7%	$ 11,199.52	$ 8,943.93	$ 11,199.52	$ 20,143.45	$ 151,049.17
10	$ 151,049.17	7%	$ 10,573.44	$ 9,570.01	$ 10,573.44	$ 20,143.45	$ 141,479.17
11	$ 141,479.17	7%	$ 9,903.54	$ 10,239.91	$ 9,903.54	$ 20,143.45	$ 131,239.26
12	$ 131,239.26	7%	$ 9,186.75	$ 10,956.70	$ 9,186.75	$ 20,143.45	$ 120,282.56
13	$ 120,282.56	7%	$ 8,419.78	$ 11,723.67	$ 8,419.78	$ 20,143.45	$ 108,558.88
14	$ 108,558.88	7%	$ 7,599.12	$ 12,544.33	$ 7,599.12	$ 20,143.45	$ 96,014.55
15	$ 96,014.55	7%	$ 6,721.02	$ 13,422.43	$ 6,721.02	$ 20,143.45	$ 82,592.12
16	$ 82,592.12	7%	$ 5,781.45	$ 14,362.00	$ 5,781.45	$ 20,143.45	$ 68,230.12
17	$ 68,230.12	7%	$ 4,776.11	$ 15,367.34	$ 4,776.11	$ 20,143.45	$ 52,862.78
18	$ 52,862.78	7%	$ 3,700.39	$ 16,443.06	$ 3,700.39	$ 20,143.45	$ 36,419.72
19	$ 36,419.72	7%	$ 2,549.38	$ 17,594.07	$ 2,549.38	$ 20,143.45	$ 18,825.65
20	$ 18,825.65	7%	$ 1,317.80	$ 18,825.65	$ 1,317.80	$ 20,143.45	$ (0.00)
Total				***$ 213,400.00***	***$ 189,469.01***	***$ 402,869.01***	

Table 5. Community Center Geothermal Retrofit Options 1 & 2: Annualized Investment Cost

Time Period	Investment	Interest Rate	Interest Accrued	Contribution to Investment	Interest Cost	Total Annual Cost	Investment Remaining
0	$ 20,000.00	7%				$ -	$ 20,000.00
1	$ 20,000.00	7%	$ 1,400.00	$ 487.86	$ 1,400.00	$ 1,887.86	$ 19,512.14
2	$ 19,512.14	7%	$ 1,365.85	$ 522.01	$ 1,365.85	$ 1,887.86	$ 18,990.13
3	$ 18,990.13	7%	$ 1,329.31	$ 558.55	$ 1,329.31	$ 1,887.86	$ 18,431.58
4	$ 18,431.58	7%	$ 1,290.21	$ 597.65	$ 1,290.21	$ 1,887.86	$ 17,833.94
5	$ 17,833.94	7%	$ 1,248.38	$ 639.48	$ 1,248.38	$ 1,887.86	$ 17,194.45
6	$ 17,194.45	7%	$ 1,203.61	$ 684.25	$ 1,203.61	$ 1,887.86	$ 16,510.21
7	$ 16,510.21	7%	$ 1,155.71	$ 732.14	$ 1,155.71	$ 1,887.86	$ 15,778.06
8	$ 15,778.06	7%	$ 1,104.46	$ 783.39	$ 1,104.46	$ 1,887.86	$ 14,994.67
9	$ 14,994.67	7%	$ 1,049.63	$ 838.23	$ 1,049.63	$ 1,887.86	$ 14,156.44
10	$ 14,156.44	7%	$ 990.95	$ 896.91	$ 990.95	$ 1,887.86	$ 13,259.53
11	$ 13,259.53	7%	$ 928.17	$ 959.69	$ 928.17	$ 1,887.86	$ 12,299.84
12	$ 12,299.84	7%	$ 860.99	$ 1,026.87	$ 860.99	$ 1,887.86	$ 11,272.97
13	$ 11,272.97	7%	$ 789.11	$ 1,098.75	$ 789.11	$ 1,887.86	$ 10,174.22
14	$ 10,174.22	7%	$ 712.20	$ 1,175.66	$ 712.20	$ 1,887.86	$ 8,998.55
15	$ 8,998.55	7%	$ 629.90	$ 1,257.96	$ 629.90	$ 1,887.86	$ 7,740.59
16	$ 7,740.59	7%	$ 541.84	$ 1,346.02	$ 541.84	$ 1,887.86	$ 6,394.58
17	$ 6,394.58	7%	$ 447.62	$ 1,440.24	$ 447.62	$ 1,887.86	$ 4,954.34
18	$ 4,954.34	7%	$ 346.80	$ 1,541.05	$ 346.80	$ 1,887.86	$ 3,413.28
19	$ 3,413.28	7%	$ 238.93	$ 1,648.93	$ 238.93	$ 1,887.86	$ 1,764.35
20	$ 1,764.35	7%	$ 123.50	$ 1,764.35	$ 123.50	$ 1,887.86	$ (0.00)
Total				***$ 20,000.00***	***$ 17,757.17***	***$ 37,757.17***	

Table 6. Community Center Geothermal Retrofit Option 3: Annualized Investment Cost

Time Period	Investment	Interest Rate	Interest Accrued	Contribution to Investment	Interest Cost	Total Annual Cost	Investment Remaining
0	$ 30,000.00	7%				$ -	$ 30,000.00
1	$ 30,000.00	7%	$ 2,100.00	$ 731.79	$ 2,100.00	$ 2,831.79	$ 29,268.21
2	$ 29,268.21	7%	$ 2,048.77	$ 783.01	$ 2,048.77	$ 2,831.79	$ 28,485.20
3	$ 28,485.20	7%	$ 1,993.96	$ 837.82	$ 1,993.96	$ 2,831.79	$ 27,647.38
4	$ 27,647.38	7%	$ 1,935.32	$ 896.47	$ 1,935.32	$ 2,831.79	$ 26,750.90
5	$ 26,750.90	7%	$ 1,872.56	$ 959.22	$ 1,872.56	$ 2,831.79	$ 25,791.68
6	$ 25,791.68	7%	$ 1,805.42	$ 1,026.37	$ 1,805.42	$ 2,831.79	$ 24,765.31
7	$ 24,765.31	7%	$ 1,733.57	$ 1,098.22	$ 1,733.57	$ 2,831.79	$ 23,667.09
8	$ 23,667.09	7%	$ 1,656.70	$ 1,175.09	$ 1,656.70	$ 2,831.79	$ 22,492.00
9	$ 22,492.00	7%	$ 1,574.44	$ 1,257.35	$ 1,574.44	$ 2,831.79	$ 21,234.65
10	$ 21,234.65	7%	$ 1,486.43	$ 1,345.36	$ 1,486.43	$ 2,831.79	$ 19,889.29
11	$ 19,889.29	7%	$ 1,392.25	$ 1,439.54	$ 1,392.25	$ 2,831.79	$ 18,449.76
12	$ 18,449.76	7%	$ 1,291.48	$ 1,540.30	$ 1,291.48	$ 2,831.79	$ 16,909.45
13	$ 16,909.45	7%	$ 1,183.66	$ 1,648.13	$ 1,183.66	$ 2,831.79	$ 15,261.32
14	$ 15,261.32	7%	$ 1,068.29	$ 1,763.50	$ 1,068.29	$ 2,831.79	$ 13,497.83
15	$ 13,497.83	7%	$ 944.85	$ 1,886.94	$ 944.85	$ 2,831.79	$ 11,610.89
16	$ 11,610.89	7%	$ 812.76	$ 2,019.03	$ 812.76	$ 2,831.79	$ 9,591.86
17	$ 9,591.86	7%	$ 671.43	$ 2,160.36	$ 671.43	$ 2,831.79	$ 7,431.51
18	$ 7,431.51	7%	$ 520.21	$ 2,311.58	$ 520.21	$ 2,831.79	$ 5,119.92
19	$ 5,119.92	7%	$ 358.39	$ 2,473.39	$ 358.39	$ 2,831.79	$ 2,646.53
20	$ 2,646.53	7%	$ 185.26	$ 2,646.53	$ 185.26	$ 2,831.79	$ -
Total				***$ 30,000.00***	***$ 26,635.76***	***$ 56,635.76***	

APPENDIX FIGURES

Figure 1. Pool Enclosure Architectural Plans: Section and Wall Elevation

Figure 2. Pool Enclosure Architectural Plans: Site Plan/Floor Plan

Figure 3. Geothermal Heating Considerations for Proposed Lava Hot Springs Pool Enclosure

Figure 4. Community Center: Geothermal Retrofit Installation Layout for All Options

Figure 5. Geothermal Retrofit Considerations for Lava Hot Springs Community Center

FIGURE 1. POOL ENCLOSURE ARCHITECTURAL PLANS: SECTION AND WALL ELEVATION

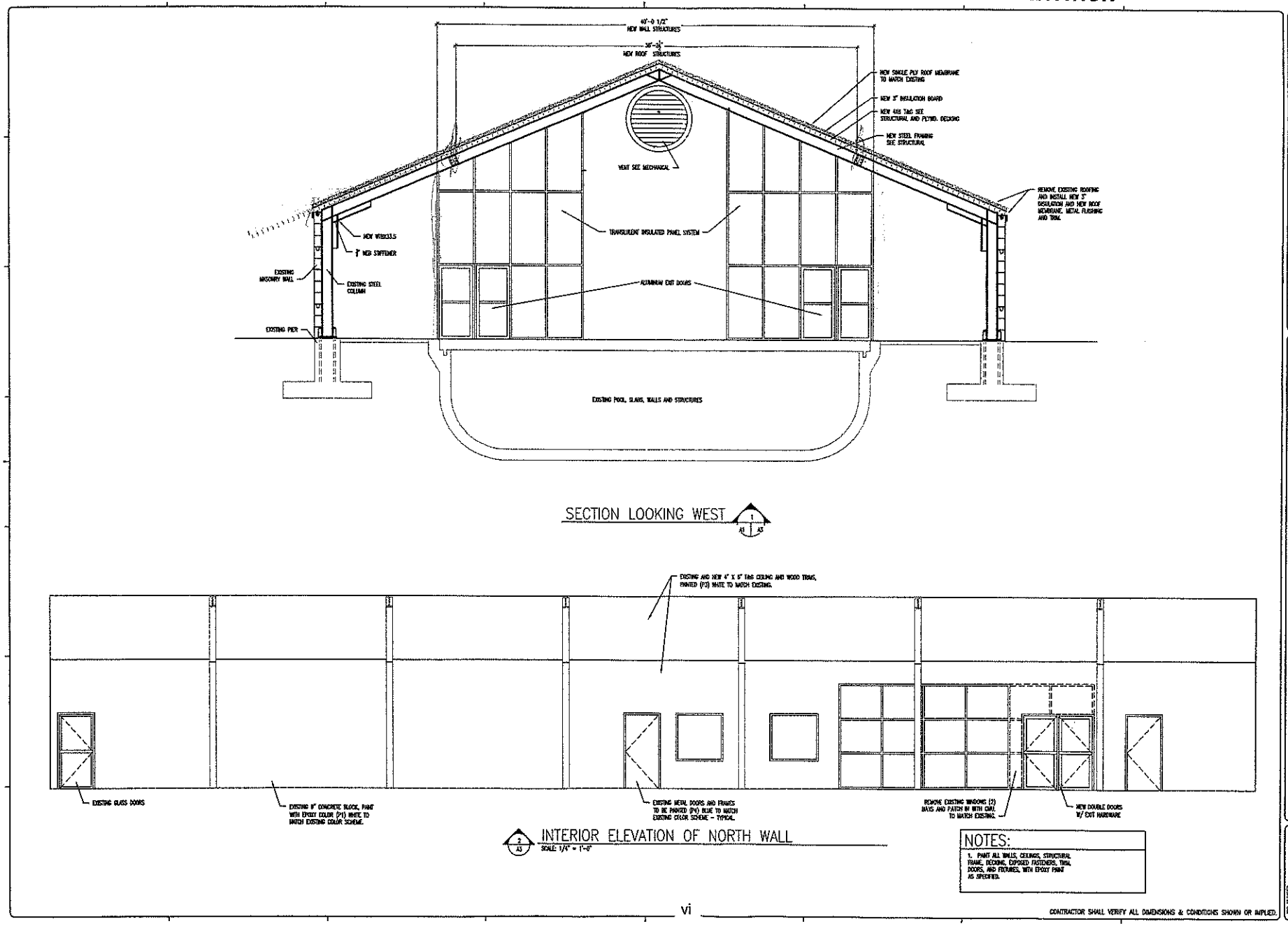

FIGURE 2. POOL ENCLOSURE ARCHITECTURAL PLANS: SITE PLAN AND FLOOR PLAN

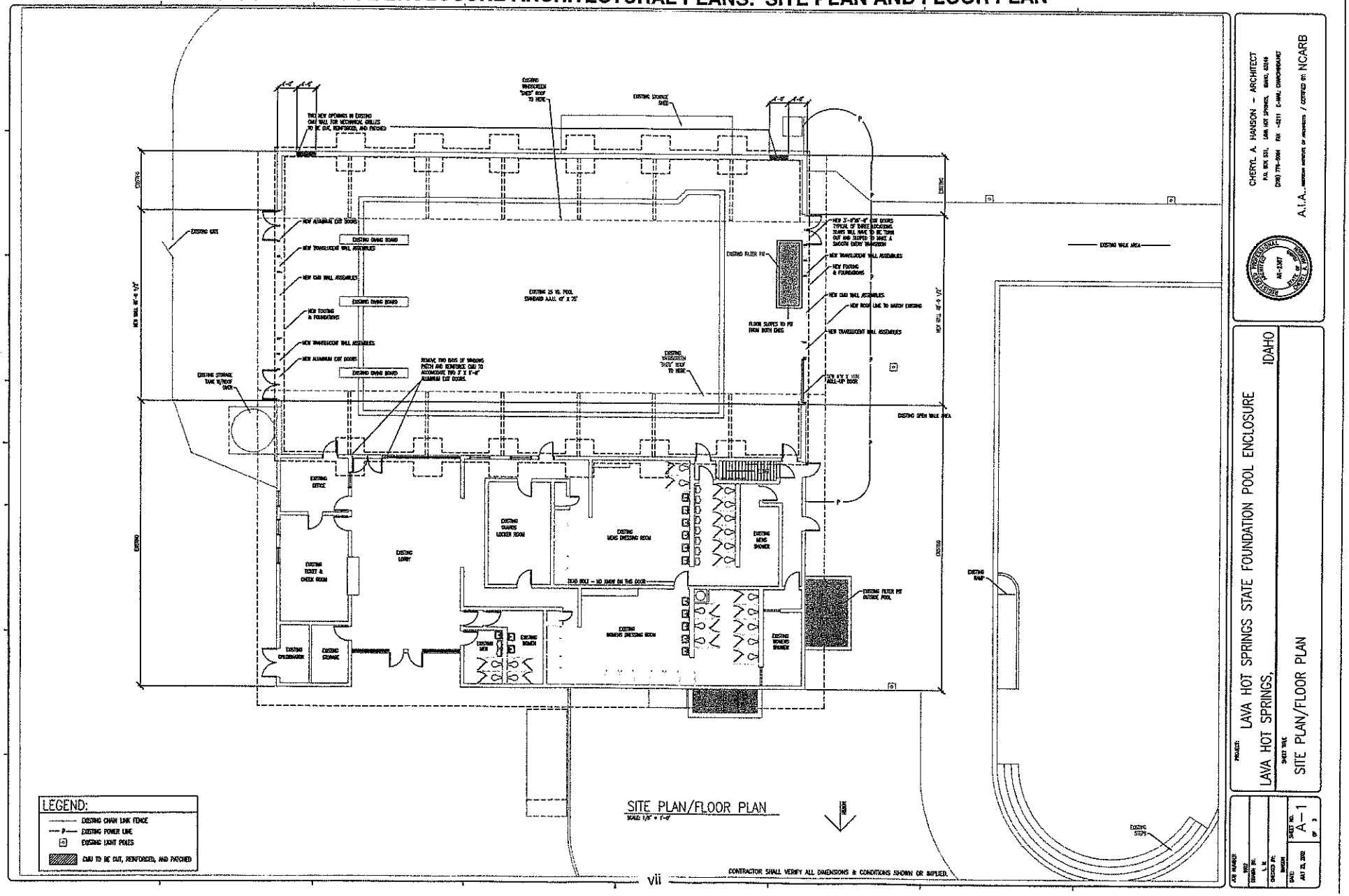

FIGURE 3. GEOTHERMAL HEATING CONSIDERATIONS FOR PROPOSED LAVA HOT SPRINGS POOL ENCLOSURE

ADDITIONAL CAPITAL COSTS ASSOCIATED WITH GEOTHERMAL HEATING PROPOSED POOL ENCLOSURE: **$ 19,440.00**

FINANCIAL FACTORS

Interest Rate	7%
Investment Life	20
Annuity Factor	0.094392926

ESTIMATED COMMUNITY CENTER ENERGY USE FOR SPACE HEATING AND ENERGY USE FACTORS

Month	Therm	Energy Use Factor December = 100
May-02	171	0.47
Jun-02	0	0.00
Jul-02	0	0.00
Aug-02	0	0.00
Sep-02	57	0.16
Oct-02	146	0.40
Nov-02	312	0.85
Dec-02	366	1.00
Jan-03	292	0.80
Feb-03	339	0.93
Mar-03	246	0.67
Apr-03	132	0.36

ESTIMATED POOL ENCLOSURE NATURAL GAS HEATING COSTS

Month	Days	Energy Use Factor December = 100	Monthly Energy Requirement (1000 cu ft)[1]	$/1000 cu ft[2]	Monthly Heating Costs
May	31	0.47	147.77	6.76	$ 998.96
June	30	0.00	-	7.11	$ -
July	31	0.00	-	7.58	$ -
August	31	0.00	-	7.94	$ -
September	30	0.16	47.67	8.63	$ 411.39
October	31	0.40	126.17	9.56	$ 1,206.19
November	30	0.85	260.93	9.74	$ 2,541.42
December	31	1.00	316.29	9.34	$ 2,954.15
January	31	0.80	252.34	9.16	$ 2,311.44
February	28	0.93	264.61	8.96	$ 2,370.87
March	31	0.67	212.59	8.79	$ 1,868.65
April	30	0.36	110.39	8.88	$ 980.28
Annual Heating Cost					**$ 15,643.35**

1 Assuming 1035 BTU per Cubic Foot of Natural Gas: Source: Energy Information Administration Annual Energy Review 2001
2 Source: Energy Information Administration. http://www.eia.doe.gov/emeu/states/_states.html 2002 Time Series Prices

FIGURE 4. COMMUNITY CENTER: GEOTHERMAL RETROFIT INSTALLATION LAYOUT FOR ALL OPTIONS

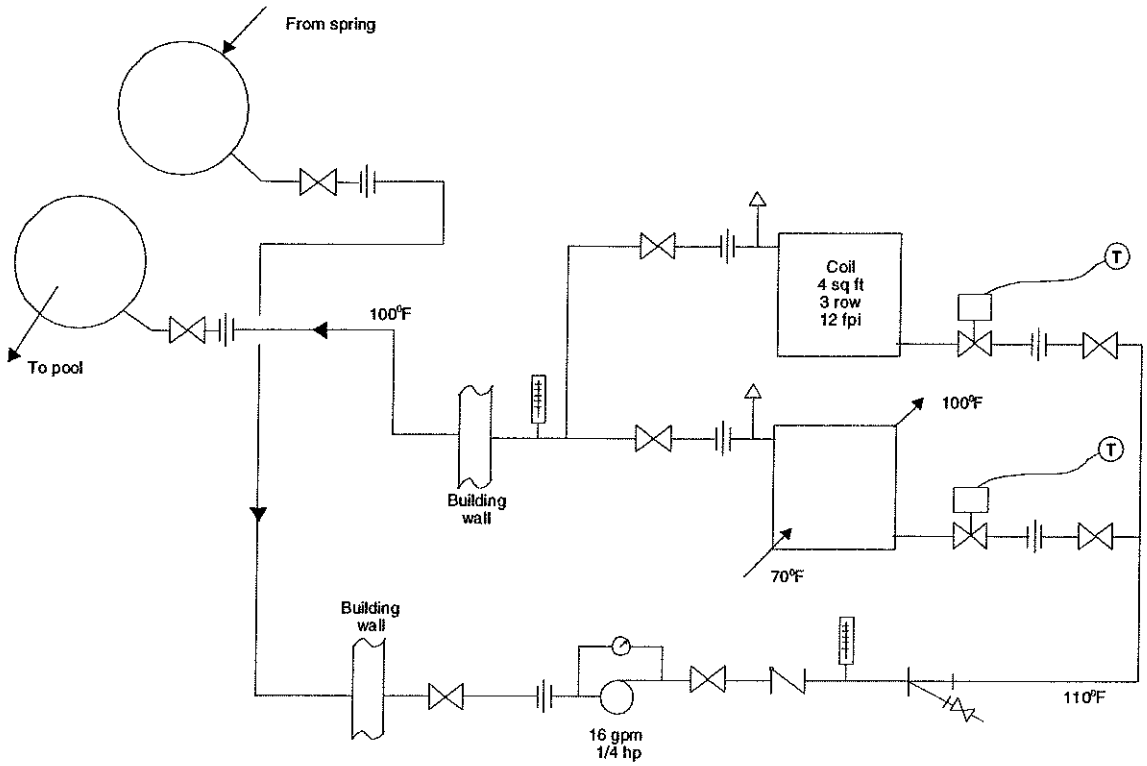

FIGURE 5. GEOTHERMAL RETROFIT CONSIDERATIONS FOR LAVA HOT SPRINGS COMMUNITY CENTER

FINANCIAL FACTORS

	Options 1 & 2	Option3
Investment Cost	$ 20,000	$ 30,000
Interest Rate	7%	7%
Investment Life	20	20
Annuity Factor	0.094392926	0.094392926

COMMUNITY CENTER HEATING CONSIDERATIONS

Month	Therm	Heating Cost
May-02	111	$ 97.86
Jun-02	56	$ 50.40
Jul-02	47	$ 31.88
Aug-02	46	$ 30.53
Sep-02	57	$ 37.34
Oct-02	146	$ 92.41
Nov-02	312	$ 192.64
Dec-02	366	$ 213.50
Jan-03	292	$ 173.19
Feb-03	339	$ 198.79
Mar-03	246	$ 148.13
Apr-03	132	$ 83.75
Annual Heating Cost		**$ 1,350.42**

		Fuel Cost Savings	Remaing Fuel Cost
Option 1:	Offset 50% of gas heating requirments	$ 675.21	$ 675.21
Option 2:	Offset 80% of gas heating requirements	$ 1,080.34	$ 270.08
Option 3:	Offset 100% of gas heating requirments	$ 1,350.42	$ -